09/08/99

TIP PROJECT: BP2.R034

CONTRACT: DB00624

See Sheet 1A For Index of Sheets
See Sheet 1B For Conventinal Symbols

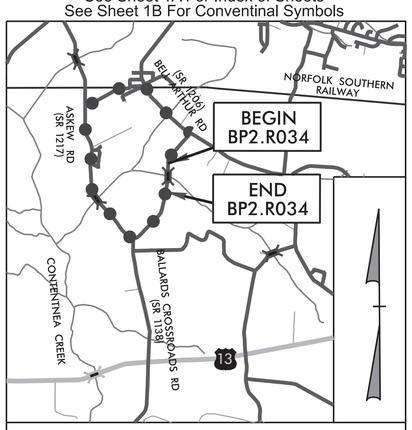

VICINITY MAP
● ● ● OFFSITE DETOUR N.T.S.

STATE OF NORTH CAROLINA
DIVISION OF HIGHWAYS

PITT COUNTY

LOCATION: *REPLACE BRIDGE NO. 131 OVER LITTLE CONTENTNEA CREEK ON SR 1138 (BALLARDS CROSSROADS RD.)*

TYPE OF WORK: *GRADING, DRAINAGE, PAVING, AND STRUCTURE*

STATE	STATE PROJECT REFERENCE NO.	SHEET NO.	TOTAL SHEETS
N.C.	BP2.R034	1	

STATE PROJ. NO.	F. A. PROJ. NO.	DESCRIPTION
BP2.R034.1	N/A	PE
BP2.R034.2		ROW/UTILITIES
BP2.R034.3		CONSTRUCTION

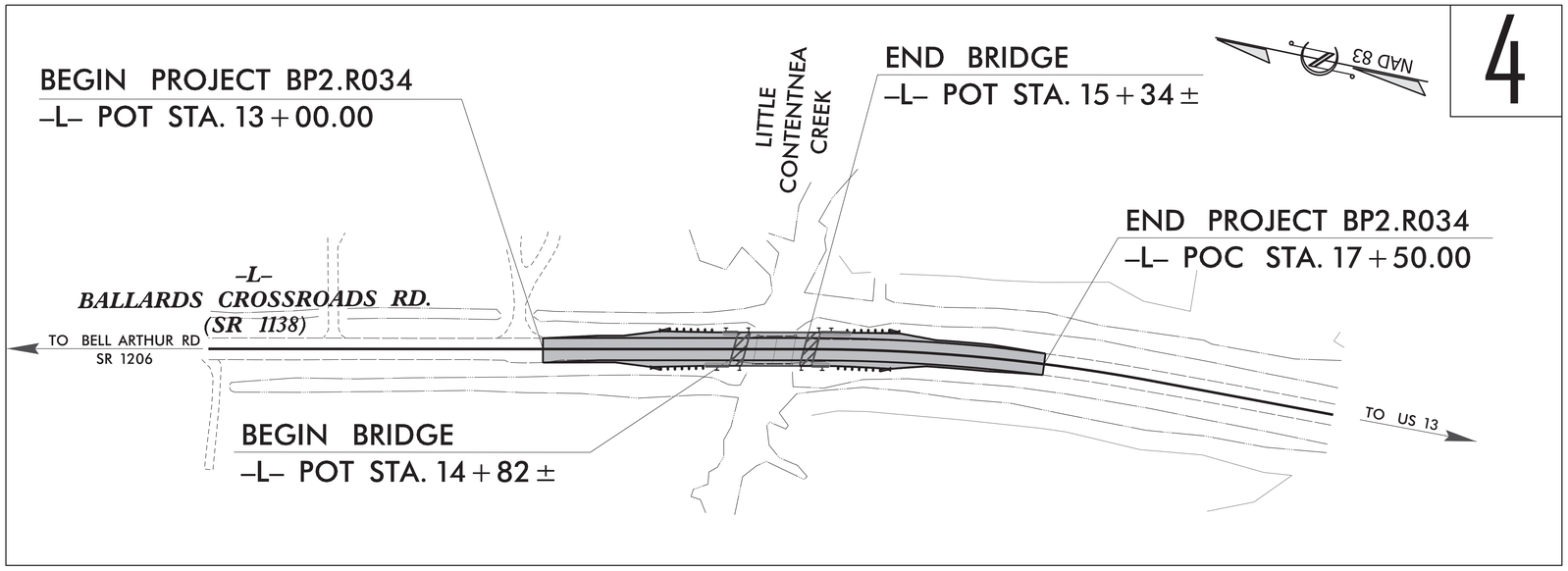

1. THIS PROJECT IS NOT WITHIN THE MUNICIPAL BOUNDARIES OF GREENVILLE, NC.
2. THIS IS NOT A CONTROL OF ACCESS PROJECT.

DOCUMENT NOT CONSIDERED FINAL UNLESS ALL SIGNATURES COMPLETED

GRAPHIC SCALES

50 25 0 50 100
PLANS

50 25 0 50 100
PROFILE (HORIZONTAL)

5 2.5 0 5 10
PROFILE (VERTICAL)

DESIGN DATA

ADT 2024 = 380
ADT 2040 = 440
K = N/A
D = N/A
T = N/A
V = 60 MPH

FUNC CLASS =
LOCAL
SUBREGIONAL TIER

PROJECT LENGTH

LENGTH OF ROADWAY TIP PROJECT BP2.R034 = 0.075 MILES
LENGTH OF STRUCTURE TIP PROJECT BP2.R034 = 0.01 MILES

TOTAL LENGTH TIP PROJECT BP2.R034 = 0.085 MILES

Prepared in the Office of:
AMT A. MORTON THOMAS AND ASSOCIATES, INC.
900 RIDGEFIELD DRIVE, SUITE 325 • RALEIGH, NC 27609
(919) 855-9988 • NC LICENSE NO. F-1369
WWW.AMTENGINEERING.COM

2024 STANDARD SPECIFICATIONS

RIGHT OF WAY DATE:
NOVEMBER 15, 2024

LETTING DATE:
JUNE 24, 2025

ROBERT WILLIAMS, PE
PROJECT ENGINEER

JP HAINLINE, EIT
PROJECT DESIGN ENGINEER

HYDRAULICS ENGINEER

Signed by: kimi Schmidt
SIGNATURE: *P.E.* 5/22/2025

NORTH CAROLINA PROFESSIONAL SEAL 53931 ENGINEER KIMI C. SCHMIDT

ROADWAY DESIGN ENGINEER

Signed by: Robert Williams
SIGNATURE: *P.E.* 5/22/2025

NORTH CAROLINA PROFESSIONAL SEAL 30932 ENGINEER ROBERT A. WILLIAMS

STATE OF NORTH CAROLINA DEPARTMENT OF TRANSPORTATION

5/26/20

INDEX OF SHEETS, LIST OF STANDARD DRAWINGS, & GENERAL NOTES

INDEX OF SHEETS

2024 ROADWAY ENGLISH STANDARD DRAWINGS

EFF. 01-16-2024
REV.

The following Roadway Standards as appear in "Roadway Standard Drawings" Contracts Standards and Development Unit - N. C. Department of Transportation - Raleigh, N. C., Dated January 16, 2024 are applicable to this project and by reference hereby are considered a part of these plans:

STD.NO. TITLE

DIVISION 2 - EARTHWORK
200.02 Method of Clearing - Method II
225.02 Guide for Grading Subgrade - Secondary and Local
225.04 Method of Obtaining Superelevation - Two Lane Pavement
275.01 Rock Plating
DIVISION 4 - MAJOR STRUCTURES
423.01 Bridge Approach Fills - Type 1 Approach Fill for Bridge Abutment
DIVISION 5 - SUBGRADE, BASES AND SHOULDERS
560.01 Method of Shoulder Construction - High Side of Superelevated Curve - Method I
DIVISION 8 - INCIDENTALS
815.02 Subsurface Drain
862.01 Guardrail Placement (Use Details in Lieu of Standards for Sheets 4, 6, 12, and 14 of 15)
862.02 Guardrail Installation
862.03 Structure Anchor Units (Use Detail in Lieu of Standard for Sheet 8 of 9)
876.01 Rip Rap in Channels and Ditches
876.02 Guide for Rip Rap at Pipe Outlets
876.04 Drainage Ditches with Class 'B' Rip Rap

GENERAL NOTES: 2024 SPECIFICATIONS

EFFECTIVE: 01-16-2024
REVISED:

GRADE LINE:
GRADING AND SURFACING:

THE GRADE LINES SHOWN DENOTE THE FINISHED ELEVATION OF THE PROPOSED SURFACING AT GRADE POINTS SHOWN ON THE TYPICAL SECTIONS. GRADE LINES MAY BE ADJUSTED AT THEIR BEGINNING AND ENDING AND AT STRUCTURES AS DIRECTED BY THE ENGINEER IN ORDER TO SECURE A PROPER TIE-IN.

CLEARING:

CLEARING ON THIS PROJECT SHALL BE PERFORMED TO THE LIMITS ESTABLISHED BY METHOD II.

SUPERELEVATION:

ALL CURVES ON THIS PROJECT SHALL BE SUPERELEVATED IN ACCORDANCE WITH STD. NO. 225.04 USING THE RATE OF SUPERELEVATION AND RUNOFF SHOWN ON THE PLANS. SUPERELEVATION IS TO BE REVOLVED ABOUT THE GRADE POINTS SHOWN ON THE TYPICAL SECTIONS.

SHOULDER CONSTRUCTION:

ASPHALT, EARTH, AND CONCRETE SHOULDER CONSTRUCTION ON THE HIGH SIDE OF SUPERELEVATED CURVES SHALL BE IN ACCORDANCE WITH STD. NO. 560.01

SUBSURFACE DRAINS

SUBSURFACE DRAINS SHALL BE CONSTRUCTED IN ACCORDANCE WITH STD. 815.03 AT LOCATIONS DIRECTED BY THE ENGINEER

GUARDRAIL:

THE GUARDRAIL LOCATIONS SHOWN ON THE PLANS MAY BE ADJUSTED DURING CONSTRUCTION AS DIRECTED BY THE ENGINEER. THE CONTRACTOR SHOULD CONSULT WITH THE ENGINEER PRIOR TO ORDERING GUARDRAIL MATERIAL.

END BENTS:

THE ENGINEER SHALL CHECK THE STRUCTURE END BENT PLANS, DETAILS, AND CROSS-SECTION PRIOR TO SETTING OF THE SLOPE STAKES FOR THE EMBANKMENT OR EXCAVATION APPROACHING A BRIDGE.

UTILITIES:

UTILITY OWNERS ON THIS PROJECT ARE BELL ARTHUR AND CENTURY LINK
ANY RELOCATION OF EXISTING UTILITIES WILL BE ACCOMPLISHED BY OTHERS.

RIGHT-OF-WAY MARKERS:

ALL RIGHT-OF-WAY MARKERS ON THIS PROJECT SHALL BE PLACED BY OTHERS.

REVISIONS

BP2.R034
001A

NORTH CAROLINA
DEPARTMENT OF TRANSPORTATION
PITT COUNTY

ROADWAY DESIGN UNIT

ROADWAY DESIGN ENGINEER

NORTH CAROLINA PROFESSIONAL SEAL 30932 ENGINEER ROBERT A. WILLIAMS
5/22/2025

DOCUMENT NOT CONSIDERED FINAL UNLESS ALL SIGNATURES COMPLETED

PREPARED BY

A. MORTON THOMAS AND ASSOCIATES, INC.
900 RIDGEFIELD DRIVE, SUITE 325•RALEIGH, NC 27609
(919) 855-9980•NC LICENSE NO. F-1049
WWW.AMTENGINEERING.COM

9/21/21

BP2.R034
001B

STATE OF NORTH CAROLINA, DIVISION OF HIGHWAYS

CONVENTIONAL PLAN SHEET SYMBOLS

Note: Not to Scale

BOUNDARIES AND PROPERTY:

- State Line
- County Line
- Township Line
- City Line
- Reservation Line
- Property Line
- Existing Iron Pin (EIP)
- Computed Property Corner
- Existing Concrete Monument (ECM)
- Parcel / Sequence Number
- Existing Fence Line
- Proposed Woven Wire Fence
- Proposed Chain Link Fence
- Proposed Barbed Wire Fence
- Existing Wetland Boundary
- Proposed Wetland Boundary
- Existing Endangered Animal Boundary
- Existing Endangered Plant Boundary
- Existing Historic Property Boundary
- Known Contamination Area: Soil
- Potential Contamination Area: Soil
- Known Contamination Area: Water
- Potential Contamination Area: Water
- Contaminated Site: Known or Potential

BUILDINGS AND OTHER CULTURE:

- Gas Pump Vent or U/G Tank Cap
- Sign
- Well
- Small Mine
- Foundation
- Area Outline
- Cemetery
- Building
- School
- Church
- Dam

HYDROLOGY:

- Stream or Body of Water
- Hydro, Pool or Reservoir
- Jurisdictional Stream
- Buffer Zone 1
- Buffer Zone 2
- Flow Arrow
- Disappearing Stream
- Spring
- Wetland
- Proposed Lateral, Tail, Head Ditch
- False Sump

RAILROADS:

- Standard Gauge
- RR Signal Milepost
- Switch
- RR Abandoned
- RR Dismantled

RIGHT OF WAY & PROJECT CONTROL:

- Primary Horiz Control Point
- Primary Horiz and Vert Control Point
- Secondary Horiz and Vert Control Point
- Vertical Benchmark
- Existing Right of Way Monument
- Proposed Right of Way Monument (Rebar and Cap)
- Proposed Right of Way Monument (Concrete)
- Existing Permanent Easement Monument
- Proposed Permanent Easement Monument (Rebar and Cap)
- Existing C/A Monument
- Proposed C/A Monument (Rebar and Cap)
- Proposed C/A Monument (Concrete)
- Existing Right of Way Line
- Proposed Right of Way Line
- Existing Control of Access Line
- Proposed Control of Access Line
- Proposed ROW and CA Line
- Existing Easement Line
- Proposed Temporary Construction Easement
- Proposed Temporary Drainage Easement
- Proposed Permanent Drainage Easement
- Proposed Permanent Drainage/Utility Easement
- Proposed Permanent Utility Easement
- Proposed Temporary Utility Easement
- Proposed Aerial Utility Easement

ROADS AND RELATED FEATURES:

- Existing Edge of Pavement
- Existing Curb
- Proposed Slope Stakes Cut
- Proposed Slope Stakes Fill
- Proposed Curb Ramp
- Existing Metal Guardrail
- Proposed Guardrail
- Existing Cable Guiderail
- Proposed Cable Guiderail
- Equality Symbol
- Pavement Removal

VEGETATION:

- Single Tree
- Single Shrub
- Hedge
- Woods Line
- Orchard
- Vineyard

EXISTING STRUCTURES:

MAJOR:

- Bridge, Tunnel or Box Culvert
- Bridge Wing Wall, Head Wall and End Wall

MINOR:

- Head and End Wall
- Pipe Culvert
- Footbridge
- Drainage Box: Catch Basin, DI or JB
- Paved Ditch Gutter
- Storm Sewer Manhole
- Storm Sewer

UTILITIES:

** SUE - Subsurface Utility Engineering*
LOS - Level of Service - A,B,C or D (Accuracy)

POWER:

- Existing Power Pole
- Proposed Power Pole
- Existing Joint Use Pole
- Proposed Joint Use Pole
- Power Manhole
- Power Line Tower
- Power Transformer
- U/G Power Cable Hand Hole
- H-Frame Pole
- U/G Power Line Test Hole (SUE - LOS A)*
- U/G Power Line (SUE - LOS B)*
- U/G Power Line (SUE - LOS C)*
- U/G Power Line (SUE - LOS D)*

TELEPHONE:

- Existing Telephone Pole
- Proposed Telephone Pole
- Telephone Manhole
- Telephone Pedestal
- Telephone Cell Tower
- U/G Telephone Cable Hand Hole
- U/G Telephone Test Hole (SUE - LOS A)*
- U/G Telephone Cable (SUE - LOS B)*
- U/G Telephone Cable (SUE - LOS C)*
- U/G Telephone Cable (SUE - LOS D)*
- U/G Telephone Conduit (SUE - LOS B)*
- U/G Telephone Conduit (SUE - LOS C)*
- U/G Telephone Conduit (SUE - LOS D)*
- U/G Fiber Optics Cable (SUE - LOS B)*
- U/G Fiber Optics Cable (SUE - LOS C)*
- U/G Fiber Optics Cable (SUE - LOS D)*

WATER:

- Water Manhole
- Water Meter
- Water Valve
- Water Hydrant
- U/G Water Line Test Hole (SUE - LOS A)*
- U/G Water Line (SUE - LOS B)*
- U/G Water Line (SUE - LOS C)*
- U/G Water Line (SUE - LOS D)*
- Above Ground Water Line

TV:

- TV Pedestal
- TV Tower
- U/G TV Cable Hand Hole
- U/G TV Test Hole (SUE - LOS A)*
- U/G TV Cable (SUE - LOS B)*
- U/G TV Cable (SUE - LOS C)*
- U/G TV Cable (SUE - LOS D)*
- U/G Fiber Optic Cable (SUE - LOS B)*
- U/G Fiber Optic Cable (SUE - LOS C)*
- U/G Fiber Optic Cable (SUE - LOS D)*

GAS:

- Gas Valve
- Gas Meter
- U/G Gas Line Test Hole (SUE - LOS A)*
- U/G Gas Line (SUE - LOS B)*
- U/G Gas Line (SUE - LOS C)*
- U/G Gas Line (SUE - LOS D)*
- Above Ground Gas Line

SANITARY SEWER:

- Sanitary Sewer Manhole
- Sanitary Sewer Cleanout
- U/G Sanitary Sewer Line
- Above Ground Sanitary Sewer
- SS Force Main Line Test Hole (SUE - LOS A)*
- SS Force Main Line (SUE - LOS B)*
- SS Force Main Line (SUE - LOS C)*
- SS Force Main Line (SUE - LOS D)*

MISCELLANEOUS:

- Utility Pole
- Utility Pole with Base
- Utility Located Object
- Utility Traffic Signal Box
- Utility Unknown U/G Line (SUE - LOS B)*
- U/G Tank; Water, Gas, Oil
- Underground Storage Tank, Approx. Loc.
- A/G Tank; Water, Gas, Oil
- Geoenvironmental Boring
- Abandoned According to Utility Records — AATUR
- End of Information — E.O.I.

PROJECT REFERENCE NO.	SHEET NO.
BP2.R034	2C-1

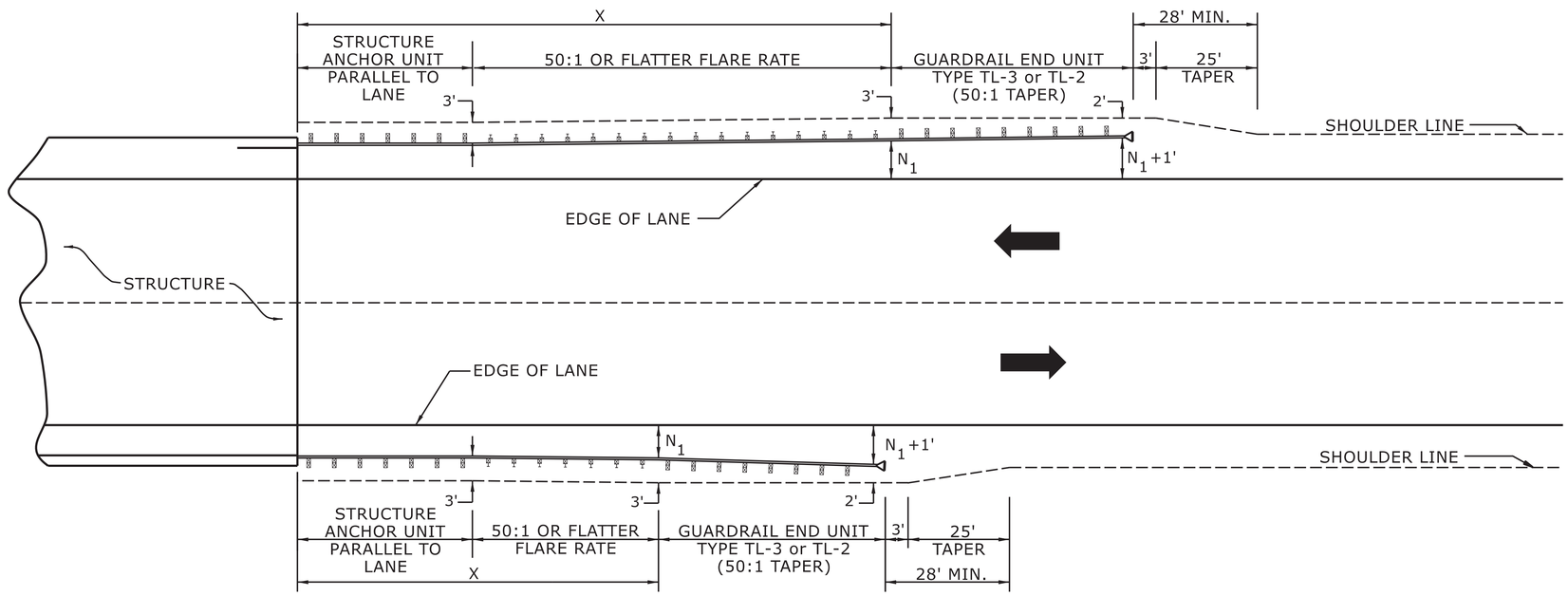

USE FLARE RATE AS THE CONTROL IF THE "N_1" DISTANCE IS NOT OBTAINED.
("N_1" IS BASED ON SHOULDER WIDTHS IN THE ROADWAY DESIGN MANUAL)

SEE STD. 862.03 FOR STRUCTURE ANCHOR UNITS

FOR POSTED SPEEDS ≥ 45MPH USE GREU TYPE TL-3
FOR POSTED SPEEDS < 45MPH USE GREU TYPE TL-2

GUARDRAIL LENGTH OF NEED (X) IS CALCULATED BASED ON THE AASHTO ROADSIDE DESIGN GUIDE.

LENGTHS AND OFFSETS FOR PROPOSED GUARDRAIL AT TWO LANE - TWO WAY LOCATIONS

STATE OF
NORTH CAROLINA
DEPT. OF TRANSPORTATION
DIVISION OF HIGHWAYS
RALEIGH, N.C.

ROADWAY DETAIL DRAWING FOR
GUARDRAIL PLACEMENT

NORTH CAROLINA PROFESSIONAL SEAL 033144 ENGINEER NICOLE M. HACKLER
Nicole M. Hackler
5/22/2025

SHEET 4 OF 15

862D01

DOCUMENT NOT CONSIDERED FINAL UNLESS ALL SIGNATURES COMPLETED

CONTRACTS STANDARDS AND DEVELOPMENT UNIT
Office 919-707-6950 FAX 919-250-4119

SEE TITLE BLOCK

ORIGINAL BY: S.CALHOUN DATE: 7-25-2024
MODIFIED BY: DATE:
CHECKED BY: DATE:
FILE SPEC.:

PROJECT REFERENCE NO.	SHEET NO.
BP2.R034	2C-2

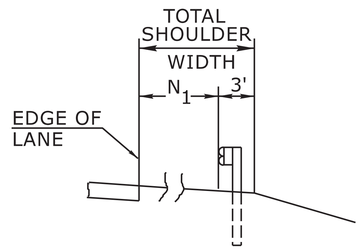

FILL SECTION

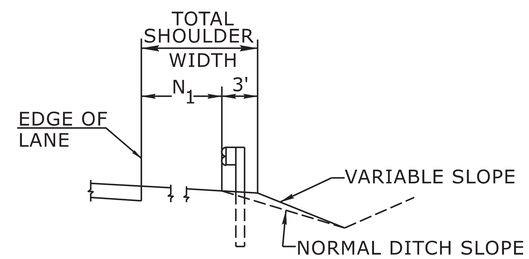

CUT SECTION

"N_1"= DISTANCE FROM EDGE OF LANE TO FACE OF GUARDRAIL WHERE GUARDRAIL IS PARALLEL TO LANE.

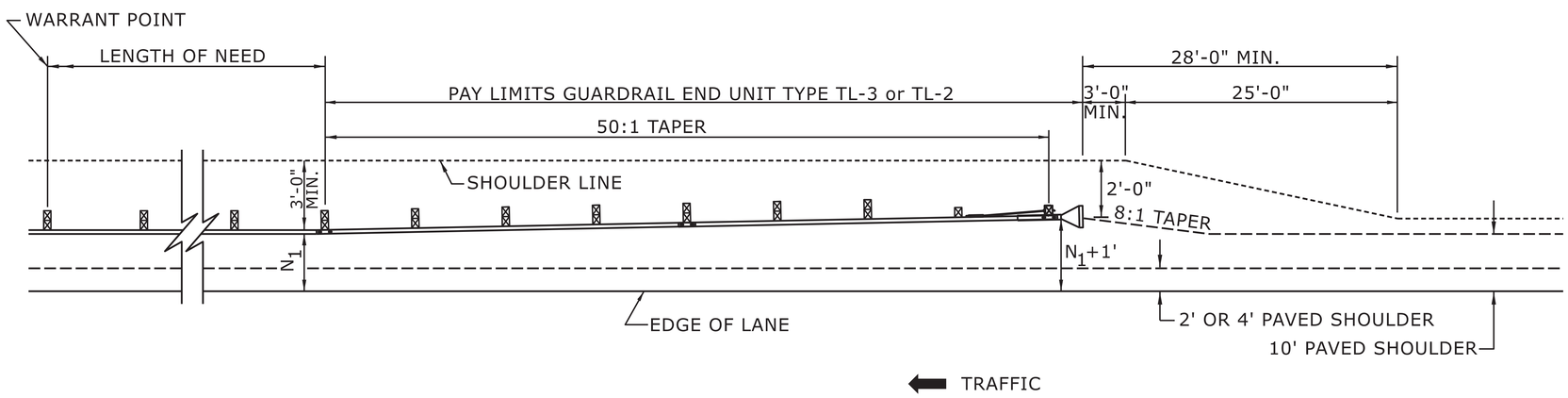

FOR POSTED SPEEDS ≥ 45mph USE GREU TYPE TL-3
FOR POSTED SPEEDS < 45mph USE GREU TYPE TL-2

DETAIL OF BEGINNING OF GUARDRAIL IN CUT OR FILL SECTION

STATE OF
NORTH CAROLINA
DEPT. OF TRANSPORTATION
DIVISION OF HIGHWAYS
RALEIGH, N.C.

ROADWAY DETAIL DRAWING FOR
GUARDRAIL PLACEMENT

SHEET 6 OF 15

862D01

NORTH CAROLINA PROFESSIONAL SEAL 033144 ENGINEER NICOLE M. HACKLER
Nicole M. Hackler
5/22/2025

DOCUMENT NOT CONSIDERED FINAL
UNLESS ALL SIGNATURES COMPLETED

CONTRACTS STANDARDS AND DEVELOPMENT UNIT
Office 919-707-6950 FAX 919-250-4119

SEE TITLE BLOCK

ORIGINAL BY:	S.CALHOUN	DATE:	7-25-2024
MODIFIED BY:		DATE:	
CHECKED BY:		DATE:	
FILE SPEC.:			

PROJECT REFERENCE NO.	SHEET NO.
BP2.R034	2C-3

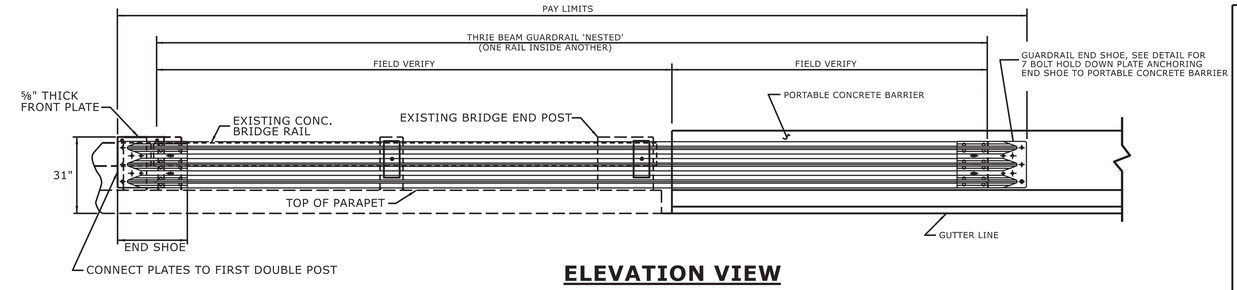

ELEVATION VIEW

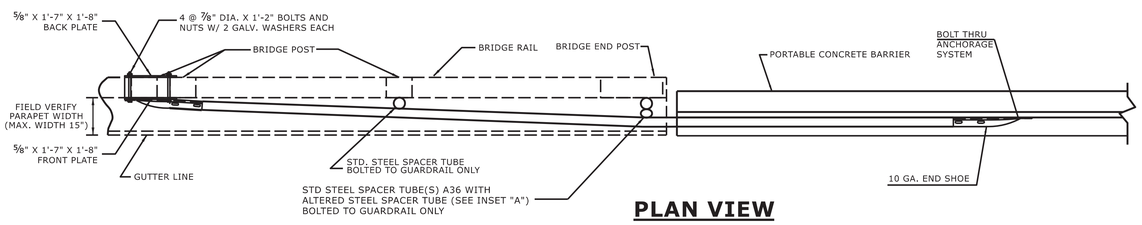

PLAN VIEW

NOTES FOR 7 BOLT HOLD DOWN PLATE

THE GUARDRAIL ANCHOR ASSEMBLY SHALL CONSIST OF A ¼" HOLD DOWN PLATE AND 7 - ⅞" DIA. BOLTS WITH NUTS AND WASHERS.

THE HOLD-DOWN PLATE SHALL CONFORM TO AASHTO M270 GRADE 36. AFTER FABRICATION, THE HOLD-DOWN PLATE SHALL BE HOT-DIP GALVANIZED IN ACCORDANCE WITH AASHTO M111.

AFTER INSTALLATION, THE EXPOSED THREAD OF THE BOLT SHALL BE BURRED WITH A SHARP POINTED TOOL. THE 1¼" DIA. HOLES SHALL BE FORMED OR DRILLED WITH A CORE BIT. IMPACT TOOLS WILL NOT BE PERMITTED. ANY CONCRETE DAMAGED BY THIS WORK SHALL BE REPAIRED TO THE SATISFACTION OF THE ENGINEER.

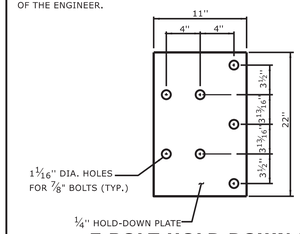

7 BOLT HOLD DOWN PLATE

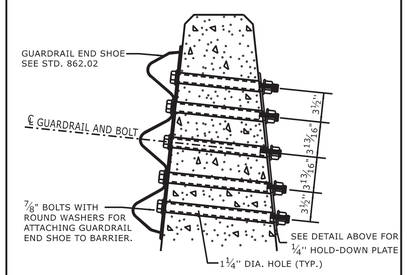

PART SECTION OF BARRIER OR RAIL

THRU END SHOE SECTION AND 7 BOLT HOLD DOWN PLATE

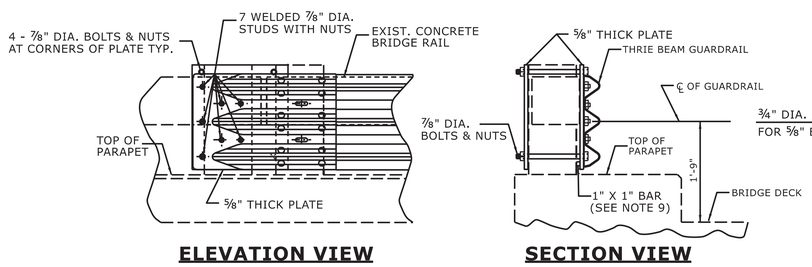

ELEVATION VIEW

SECTION VIEW

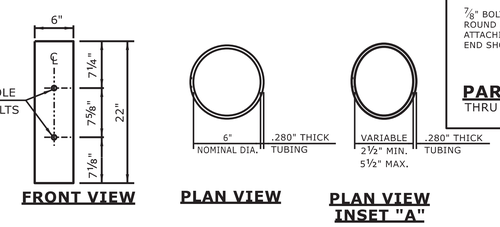

FRONT VIEW

PLAN VIEW

PLAN VIEW INSET "A"

STEEL SPACER TUBE

GENERAL NOTES:

1. USE NUTS, BOLTS, AND WASHERS CONFORMING TO THE REQUIREMENTS OF A.S.T.M. A-307 AND GALVANIZED IN ACCORDANCE WITH SECTION 1076 OF STAND. SPECS.
2. TAP NUTS FOR THE ⅞" DIA. STUDS AND BOLTS AFTER GALVANIZING SEE A.S.T.M. A-563.
3. USE PLATES AND TUBES CONFORMING TO THE REQUIREMENTS OF A.S.T.M. A-36 AND GALVANIZED AFTER FABRICATION IN ACCORDANCE WITH SECTION 1076 OF STAND. SPECS.
4. ADDITIONAL FIELD HOLES MAY BE DRILLED IN STEEL RAIL AS DIRECTED BY THE ENGINEER.
5. INSTALL FACE OF GUARDRAIL AS NEAR AS POSSIBLE TO PLUMB WITH THE PARAPET FACE AT BRIDGE END POST SPACER TUBE LOCATION BY USING STANDARD OR ALTERED SPACER TUBES OR A COMBINATION THEREOF OR AS DIRECTED BY THE ENGINEER. FOR VERY SMALL PARAPET WIDTHS, GUARDRAIL MAY BE INSTALLED AGAINST BRIDGE RAIL WITHOUT SPACER TUBES.
6. DO NOT DRILL BRIDGE RAIL IN ORDER TO INSTALL GUARDRAIL ANCHOR UNIT.
7. USE THIS DETAIL ONLY FOR BRIGES WITH POST AND BEAM TYPE RAIL.
8. ATTACH 1" X 1" BAR AND THREADED STUDS TO PLATE WITH ¼" WELDS ALL AROUND.
9. 1" X 1" BAR MAY NOT BE NEEDED ON BRIDGE RAILS WHERE FACE OF RAIL DOES NOT PROJECT BEYOND FACE OF POST.
10. PROVIDE SHOP DRAWINGS OF THE PLATES TO THE ENGINEER FOR APPROVAL BEFORE FABRICATING THE PLATES.
11. LAP JOINTS IN THE DIRECTION OF TRAFFIC FLOW.
12. SEE ROADWAY STANDARD DRAWING 862.03 SHEET 3 FOR ADDITIONAL INFORMATION ON THE TYPE III ANCHOR UNIT

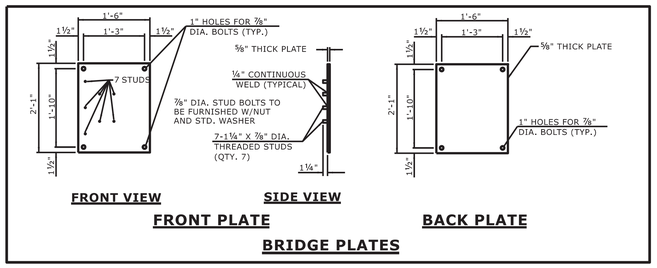

FRONT VIEW

SIDE VIEW

FRONT PLATE

BACK PLATE

BRIDGE PLATES

STATE OF NORTH CAROLINA
DEPT. OF TRANSPORTATION
DIVISION OF HIGHWAYS
RALEIGH, N.C.

ROADWAY DETAIL DRAWING FOR
STRUCTURE ANCHOR UNITS
TEMPORARY ANCHOR UNIT TYPE THRIE-BEAM

NORTH CAROLINA PROFESSIONAL SEAL 033144 ENGINEER NICOLE M. HACKLER
5/22/2025

SHEET 8 OF 9

862D03

DOCUMENT NOT CONSIDERED FINAL UNLESS ALL SIGNATURES COMPLETED

CONTRACTS STANDARDS AND DEVELOPMENT UNIT
Office 919-707-6950 FAX 919-250-4119

SEE TITLE BLOCK

ORIGINAL BY: S.CALHOUN DATE: 7-25-2024
MODIFIED BY: DATE:
CHECKED BY: DATE:
FILE SPEC.:

5/26/20

PAVEMENT SCHEDULE

C1	PROP. APPROX. 3″ ASPHALT CONCRETE SURFACE COURSE, TYPE S9.5B, AT AN AVERAGE RATE OF 165 LBS. PER SQ. YD. IN EACH OF TWO LAYERS
C2	PROP. VAR. DEPTH ASPHALT CONCRETE SURFACE COURSE, TYPE S9.5B, AT AN AVERAGE RATE OF 110 LBS. PER SQ. YD. PER 1″ DEPTH. TO BE PLACED IN LAYERS NOT TO EXCEED 1½″ IN DEPTH.
D1	PROP. APPROX. 4″ ASPHALT CONCRETE INTERMEDIATE COURSE, TYPE I19.0C, AT AN AVERAGE RATE OF 456 LBS. PER SQ. YD.
D2	PROP. VAR. DEPTH ASPHALT CONCRETE INTERMEDIATE COURSE, TYPE I19.0C, AT AN AVERAGE RATE OF 114 LBS. PER SQ. YD. PER 1″ DEPTH, TO BE PLACED IN LAYERS NOT LESS THAN 2½″ IN DEPTH OR GREATER THAN 4″ IN DEPTH.
E1	PROP. APPROX. 4″ ASPHALT CONCRETE BASE COURSE, TYPE B25.0C, AT AN AVERAGE RATE OF 456 LBS. PER SQ. YD.
E2	PROP. VAR. DEPTH ASPHALT CONCRETE BASE COURSE, TYPE B25.0C, AT AN AVERAGE RATE OF 114 LBS. PER SQ. YD. PER 1″ DEPTH. TO BE PLACED IN LAYERS NOT LESS THAN 3″ IN DEPTH OR GREATER THAN 5.5″ IN DEPTH.
T	EARTH MATERIAL.
U	EXISTING PAVEMENT.
V	INCIDENTAL MILLING
W	VARIABLE DEPTH ASPHALT PAVEMENT (SEE -L- WEDGING DETAIL)

NOTE: ALL PAVEMENT EDGE SLOPES ARE 1:1 UNLESS SHOWN OTHERWISE.

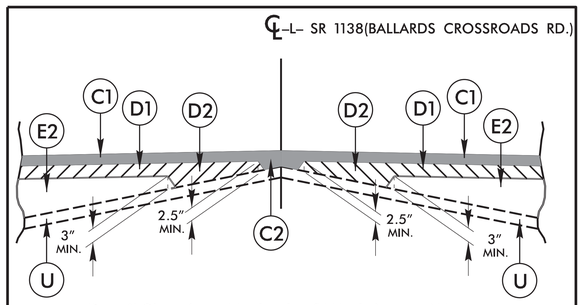

Detail Showing Method of Wedging – W

**NOTE: UTILIZE 2:1 SLOPES IN AREAS ADJACENT TO WETLANDS. SEE CROSS SECTIONS

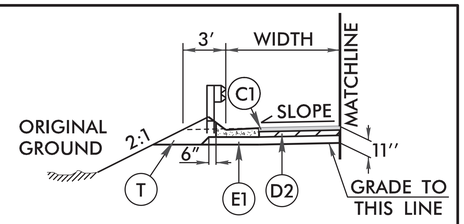

SHOULDER BERM GUTTER DETAIL

USE IN CONJUNCTION WITH TYPICAL SECTION NO. 2

–L– LT STA. 14+61.94 TO STA. 14+75.02 (BEGIN APPROACH SLAB)
–L– LT STA. 15+48.92 (END APPROACH SLAB) TO STA. 15+75.46
–L– RT STA. 14+45.55 TO STA. 14+66.98 (BEGIN APPROACH SLAB)
–L– LT STA. 15+41.02 (END APPROACH SLAB) TO STA. 15+56.73
WIDTH=5.25′; SLOPE=0.02

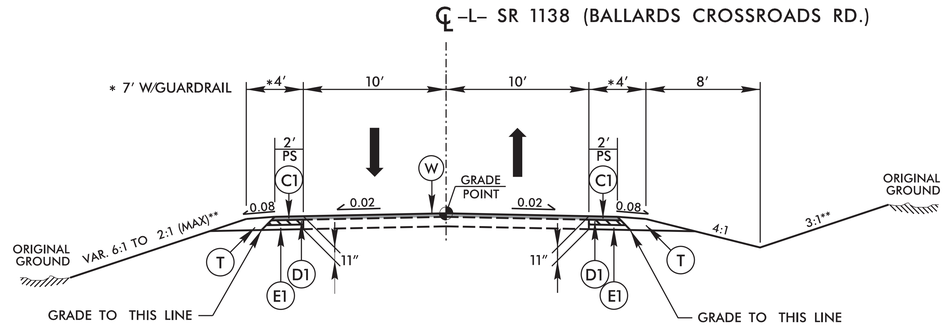

TYPICAL SECTION NO. 1

–L– STA. 13+00.00 TO STA. 13+85.00
–L– STA. 16+30.00 TO STA. 17+50.00

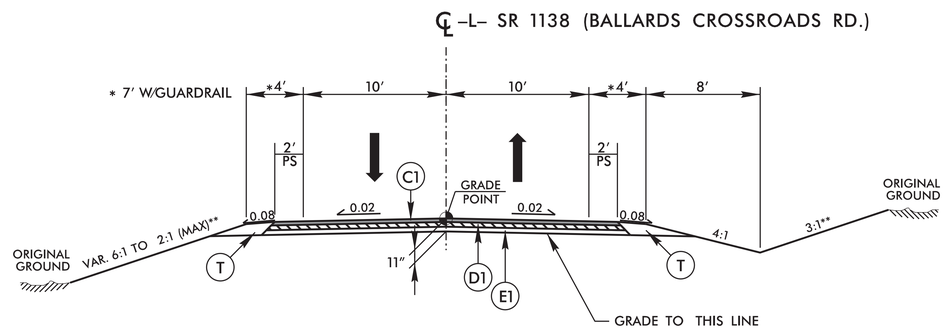

TYPICAL SECTION NO. 2

–L– STA. 13+85.00 TO STA. 14+81.88 (BEGIN BRIDGE)
–L– STA. 15+34.13 (END BRIDGE) TO STA. 16+30.00

MILLING DETAIL
INCIDENTAL MILLING AT BEGIN/END FOR TIE–INS

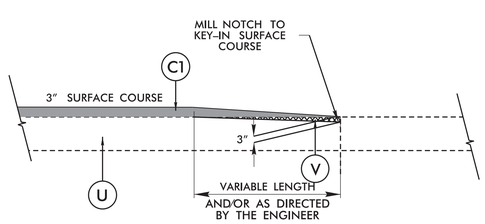

–L– STA. 13+00.00 TO STA. 13+50.00
–L– STA. 17+00.00 TO STA. 17+50.00

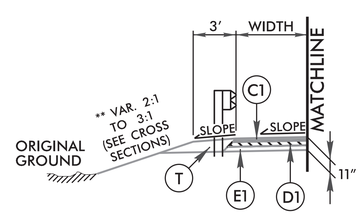

GUARDRAIL DETAIL

USE IN CONJUNCTION WITH TYPICAL SECTION NO. 2

–L– LT STA. 14+04.65 TO STA. 14+65.02
–L– LT STA. 15+58.83 TO STA. 16+19.10
–L– RT STA. 13+96.61 TO STA. 14+56.98
–L– RT STA. 15+51.11 TO STA. 16+12.43

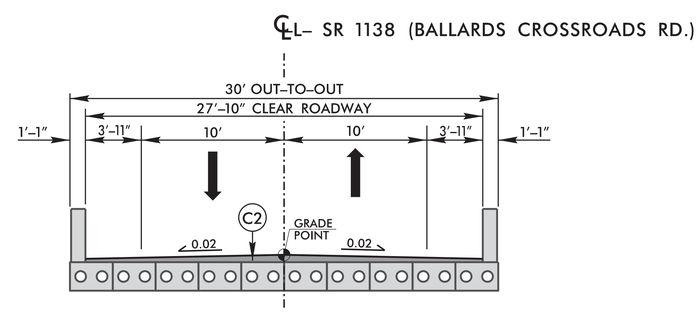

TYPICAL SECTION NO. 3***

–L– STA. 14+81.88 (BEGIN BRIDGE) TO STA. 15+34.13 (END BRIDGE)

***NOTE: SEE STRUCTURE PLANS FOR STRUCTURE CONSTRUCTION DETAILS

BP2.R034
2A-1

NORTH CAROLINA DEPARTMENT OF TRANSPORTATION
PITT COUNTY

ROADWAY DESIGN UNIT

ROADWAY DESIGN ENGINEER

NORTH CAROLINA PROFESSIONAL SEAL 30932 ENGINEER ROBERT A. WILLIAMS
DocuSigned by: Robert A. Williams
5/22/2025

PAVEMENT DESIGN ENGINEER

PREPARED BY

A. MORTON THOMAS AND ASSOCIATES, INC.
900 RIDGEFIELD DRIVE, SUITE 325•RALEIGH, NC 27609
(919) 855-9900•NC LICENSE NO. F-1040
WWW.AMTENGINEERING.COM

DOCUMENT NOT CONSIDERED FINAL UNLESS ALL SIGNATURES COMPLETED

REVISIONS

5/26/20

COMPUTED BY: J. HAINLINE DATE: 2-14-2025
CHECKED BY: R. WILLIAMS DATE: 2-14-2025

BP2.R034
38-1

DOCUMENT NOT CONSIDERED FINAL UNLESS ALL SIGNATURES COMPLETED

STATE OF NORTH CAROLINA
DIVISION OF HIGHWAYS

EARTHWORK SUMMARY

STATION	STATION	EXCAVATION TOTAL UNCLASS.	EXCAVATION UNDERCUT	EMBANKMENT	BORROW	TOTAL WASTE
-L- 13+00	-L- 14+82	57		114	56	
-L- 15+34	-L- 17+50	35		151	116	
	SUBTOTAL	92		265	173	
TOTAL		92		265	173	
MATERIAL FOR SHOULDER CONSTRUCTION						
LOSS DUE TO CLEARING & GRUBBING						
WASTE IN LIEU OF BORROW						
PROJECT TOTAL		92		265	173	
EST. 5% TO REPLACE TOP SOIL ON BORROW PIT					9	
GRAND TOTAL						
SAY		100			200	

Note: Approximate quantities only. Unclassified Excavation, Fine Grading, Clearing and Grubbing, Removal of Existing Asphalt Pavement, and Breaking of Existing Asphalt Pavement will be paid for at the contract lump sum price for "Grading."

Note: Earthwork quantities are calculated by the roadway designer. No subsurface data provided is available for this project.

REMOVAL OF EXISTING ASPHALT PAVEMENT

LINE	BEIGN STATION	END STATION	LOC.	LENGTH OR AREA	WIDTH	SQUARE YARDS
-L-	13+85	14+91	CL	2,079.58	---	231.06
-L-	15+25	16+30	CL	2,074.72	---	230.52
					TOTAL	461.59
					SAY	465

5/26/20

COMPUTED BY: J. HAINLINE DATE: 8-22-2024
CHECKED BY: R. WILLIAMS DATE: 8-22-2024

BP2.R034
38-2

DOCUMENT NOT CONSIDERED FINAL UNLESS ALL SIGNATURES COMPLETED

STATE OF NORTH CAROLINA
DIVISION OF HIGHWAYS

GUARDRAIL SUMMARY

LINE	BEG. STA.	END STA.	LOC.	LENGTH			WARRANT POINT		"N" DIST. FROM E.O.L.	TOTAL SHLDR WIDTH	FLARE LENGTH		W		ANCHOR / END UNITS				REMOVE EXISTING GUARDRAIL	REMOVE & RESET EXISTING GUARDRAIL	REMOVE & STOCKPILE EXISTING GUARDRAIL	REMARKS
				STRAIGHT	SHOP CURVED	DOUBLE FACED	APPROACH END	TRAILING END			APPROACH END	TRAILING END	APPROACH END	TRAILING END	AT-1	GREU TL-3	TYPE III	TYPE III SC				
L	14+04.65	14+85.90	LT	81.25				14+10.90	5.0'	8.0'		50.0'		1.0'		1	1					
L	13+96.61	14+77.86	RT	81.25			14+02.86		5.0'	8.0'	50.0'		1.0'			1	1					
L	15+38.14	16+19.10	LT	81.25			16+13.14		5.0'	8.0'	50.0'		1.0'			1	1					
L	15+30.11	16+12.41	RT	81.25				16+05.11	5.0'	8.0'		50.0'		1.0'		1	1					
	SUBTOTALS			325.00	0.00										0	4	4	0				
	DEDUCTIONS																					
	GREU TL-3 @ 50'			-200.00																		
	TYPE III @ 18.75'			-75.00																		
	TYPE III SC @ 18.75'				0																	
	AT-1 @ 6.25'				0.00																	
	Total			50.00	0.00																	
	SAY			**62.5**	**0.0**		**5 ADDITIONAL POSTS**								**0**	**4**	**4**	**0**				

"N" = DISTANCE FROM EDGE OF LANE TO FACE OF GUARDRAIL
TOTAL SHOULDER WIDTH = DISTANCE FROM EDGE OF TRAVEL LANE TO SHOULDER BREAK POINT
FLARE LENGTH = DISTANCE FROM LAST SECTION OF PARALLEL GUARDRAIL TO END OF GUARDRAIL
W = TOTAL WIDTH OF FLARE FROM BEGINNING OF TAPER TO END OF GUARDRAIL

SHOULDER BERM GUTTER SUMMARY

LOCATION	SIDE	BEG. STA.	END STA.	LENGTH
L	LT	14+62.00	14+75.00	13.0
L	RT	14+46.00	14+67.00	21.0
L	LT	15+49.00	15+75.00	26.0
L	RT	15+41.00	15+57.00	16.0
			TOTAL	76.0
			SAY	76

COMPUTED BY: Tyler C. Bottoms DATE: 5/31/2024
CHECKED BY: Jinyoung Park DATE: 8/15/2024
REVISED BY: Jinyoung Park DATE: 3/11/2025

(2-3-23)

STATE OF NORTH CAROLINA
DIVISION OF HIGHWAYS

PROJECT NO.	SHEET NO.
BP2.R034	3G-1

SUMMARY OF SUBSURFACE DRAINAGE

LINE	Station	Station	Location LT/RT/CL	Drain Type* UD/BD/SD	LF
CONTINGENCY				SD	200
				TOTAL LF:	200

*UD = Underdrain
*BD = Blind Drain
*SD = Subsurface Drain

SUMMARY OF ROCK PLATING

LINE	Beginning Slope (H:V)	Approx. Station	Ending Slope (H:V)	Approx. Station	Location LT/RT	Rock Plating Detail No. 1/2/3/4	Riprap Class* 1/2/B	Rock Plating SY
-L-	2:1	13+75	2:1	14+77	LT	1	-	130
-L-	2:1	13+75	2:1	14+65	RT	1	-	80
-L-	2:1	15+50	2:1	16+40	LT	1	-	160
-L-	2:1	15+40	2:1	16+35	RT	1	-	100
							TOTAL SY:	470

*Use Class 1, 2 or B riprap if riprap class is not shown for rock plating location.

5/26/20

ROCK PLATING DETAIL NO. 1 – TYPICAL SECTION

FROM STA. 13+75 TO STA. 14+77 –L– LT.
FROM STA. 13+75 TO STA. 14+65 –L– RT.
FROM STA. 15+50 TO STA. 16+40 –L– LT.
FROM STA. 15+40 TO STA. 16+35 –L– RT.

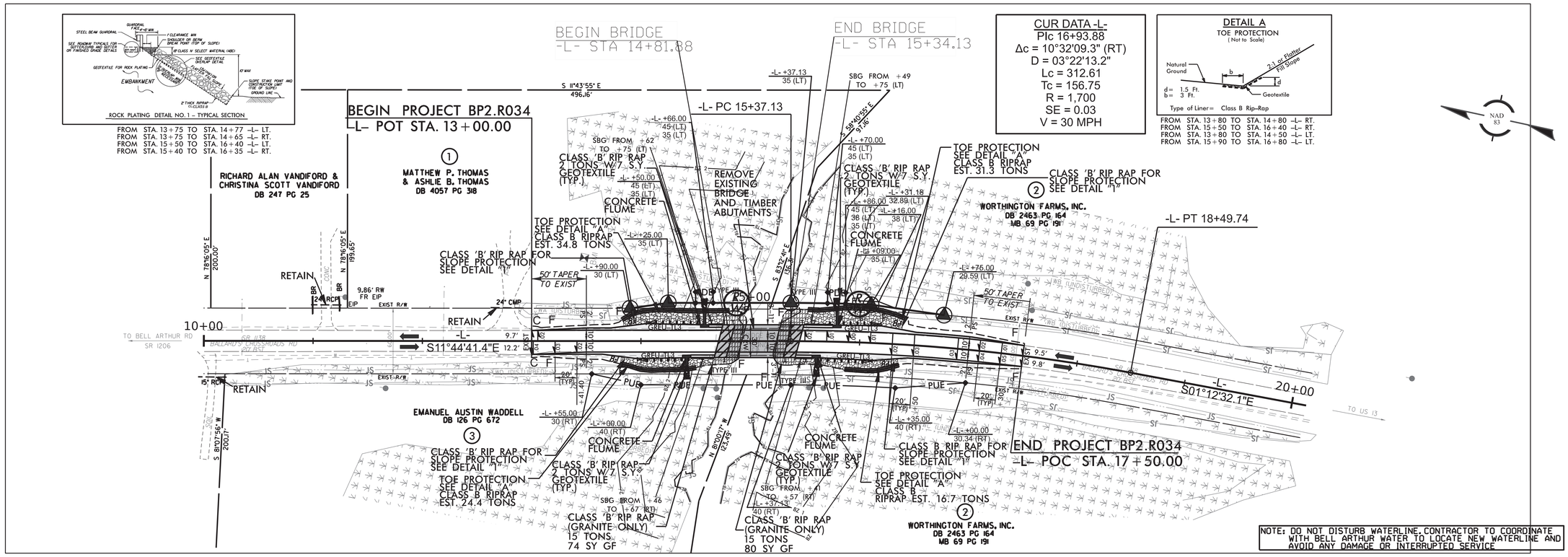

CUR DATA -L-
PIc 16+93.88
Δc = 10°32'09.3" (RT)
D = 03°22'13.2"
Lc = 312.61
Tc = 156.75
R = 1,700
SE = 0.03
V = 30 MPH

DETAIL A
TOE PROTECTION
(Not to Scale)

FROM STA. 13+80 TO STA. 14+80 –L– RT.
FROM STA. 15+50 TO STA. 16+40 –L– LT.
FROM STA. 13+80 TO STA. 14+50 –L– LT.
FROM STA. 15+90 TO STA. 16+80 –L– LT.

NOTE: DO NOT DISTURB WATERLINE. CONTRACTOR TO COORDINATE WITH BELL ARTHUR WATER TO LOCATE NEW WATERLINE AND AVOID ANY DAMAGE OR INTERRUPTED SERVICE

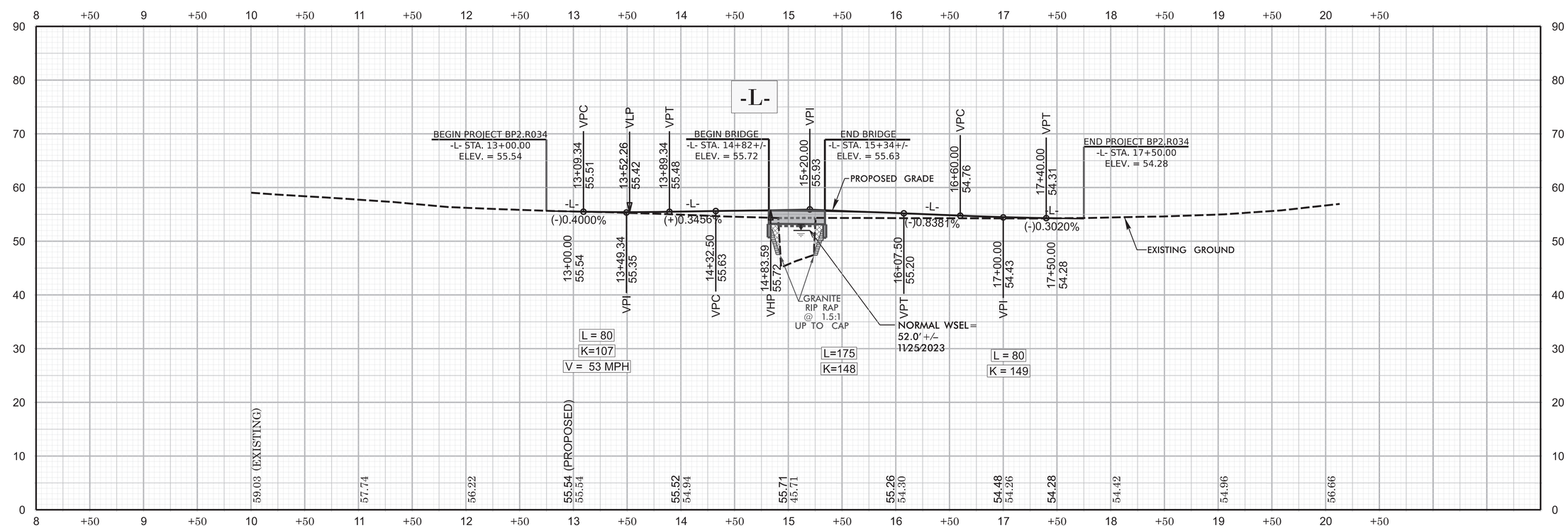

BP2.R034
04

NORTH CAROLINA DEPARTMENT OF TRANSPORTATION
PITT COUNTY

ROADWAY DESIGN UNIT

ROADWAY DESIGN ENGINEER
NORTH CAROLINA PROFESSIONAL SEAL 30932 ENGINEER ROBERT A. WILLIAMS
5/22/2025

HYDRAULICS ENGINEER
NORTH CAROLINA PROFESSIONAL SEAL 53931 ENGINEER KIMI C. SCHMIDT
5/22/2025

PREPARED BY
AMT
A. MORTON THOMAS AND ASSOCIATES, INC.
900 RIDGEFIELD DRIVE, SUITE 325•RALEIGH, NC 27609
(919) 855-9980•NC LICENSE NO. F-1049
WWW.AMTENGINEERING.COM

DOCUMENT NOT CONSIDERED FINAL UNLESS ALL SIGNATURES COMPLETED

REVISIONS

5/26/20

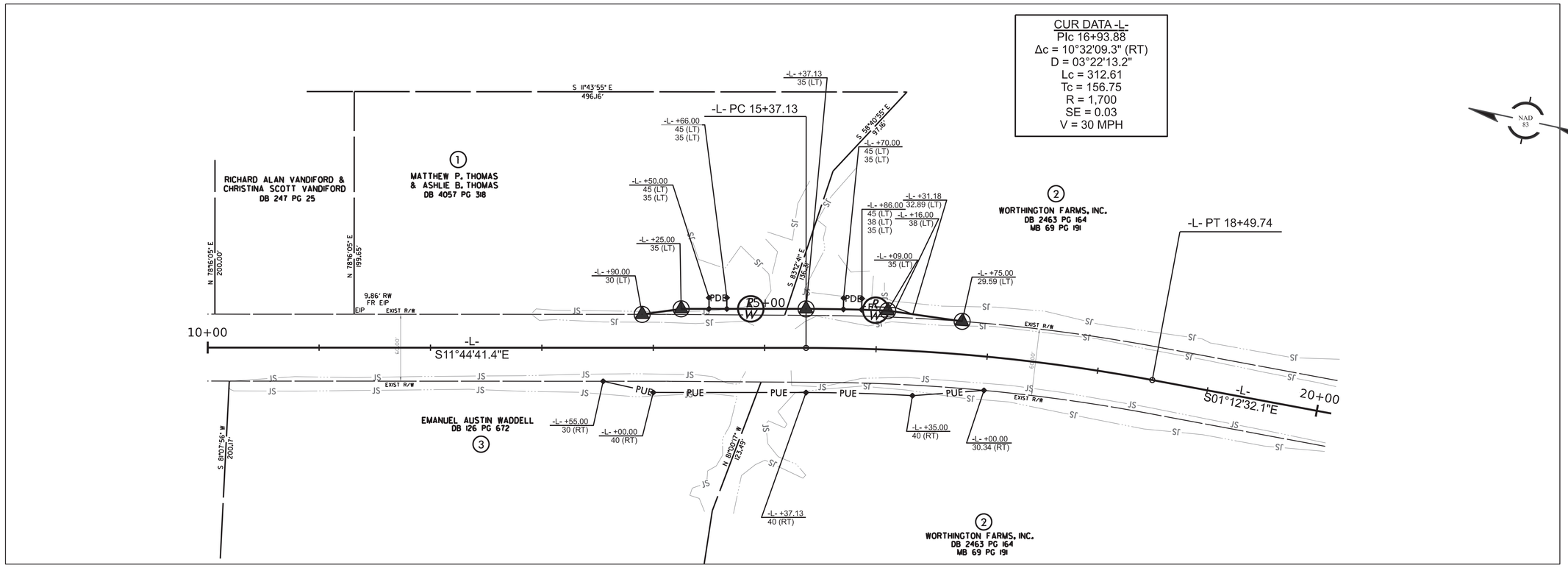

PARCEL NO.	SHEET NO.	PROPERTY OWNER NAME	TOTAL AREA	ROW AREA	AREA REMAINING LEFT	AREA REMAINING RIGHT	TEMPORARY CONSTRUCTION EASEMENT	PERMANENT DRAINAGE EASEMENT	TEMPROARY DRAINAGE EASEMENT	PERMANENT UTILITY EASEMENT
1	4	MATTHEW P THOMAS AND ASHLIE B THOMAS	1.96 AC.	593.27 SF.	1.95 AC.	---	---	160.00 SF.	---	---
2	4	WORTHINGTON FARMS, INC	UNKNOWN	701.25 SF.	UNKNOWN	---	123.08 SF.	163.76 SF.	---	1597.54 SF.
3	4	EMANUEL AUSTIN WADDELL	UNKNOWN	---	---	UNKNOWN	---	---	---	1153.15 SF.

BP2.R034

RW-04

NORTH CAROLINA
DEPARTMENT OF TRANSPORTATION
PITT COUNTY

ROADWAY DESIGN UNIT

ROADWAY DESIGN ENGINEER
NORTH CAROLINA PROFESSIONAL SEAL 30932 ENGINEER ROBERT A. WILLIAMS
5/22/2025

HYDRAULICS ENGINEER
NORTH CAROLINA PROFESSIONAL SEAL 53931 ENGINEER KIMI C. SCHMIDT
5/22/2025

PREPARED BY

A. MORTON THOMAS AND ASSOCIATES, INC.
900 RIDGEFIELD DRIVE, SUITE 325•RALEIGH, NC 27609
(919) 855-9900•NC LICENSE NO. F-1049
WWW.AMTENGINEERING.COM

DOCUMENT NOT CONSIDERED FINAL UNLESS ALL SIGNATURES COMPLETED

REVISIONS

TIP PROJECT: BP2.R034

CONTRACT: DB00624

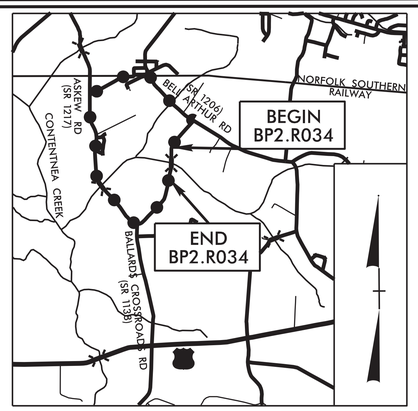

VICINITY MAP
NOT TO SCALE

STATE OF NORTH CAROLINA
DIVISION OF HIGHWAYS

PLAN FOR PROPOSED
HIGHWAY EROSION CONTROL

PITT COUNTY

STATE	STATE PROJECT REFERENCE NO.	SHEET NO.	TOTAL SHEETS
N.C.	BP2.R034	EC-1	

STATE PROJ. NO.	F. A. PROJ. NO.	DESCRIPTION
BP2.R034.1		PE
BP2.R034.2		ROW/UTILITIES
BP2.R034.3		CONSTRUCTION

LOCATION: *REPLACE BRIDGE NO. 131 OVER LITTLE CONTENTNEA CREEK ON SR 1138 (BALLARDS CROSSROADS RD.)*

TYPE OF WORK: *GRADING, DRAINAGE, PAVING, AND STRUCTURE*

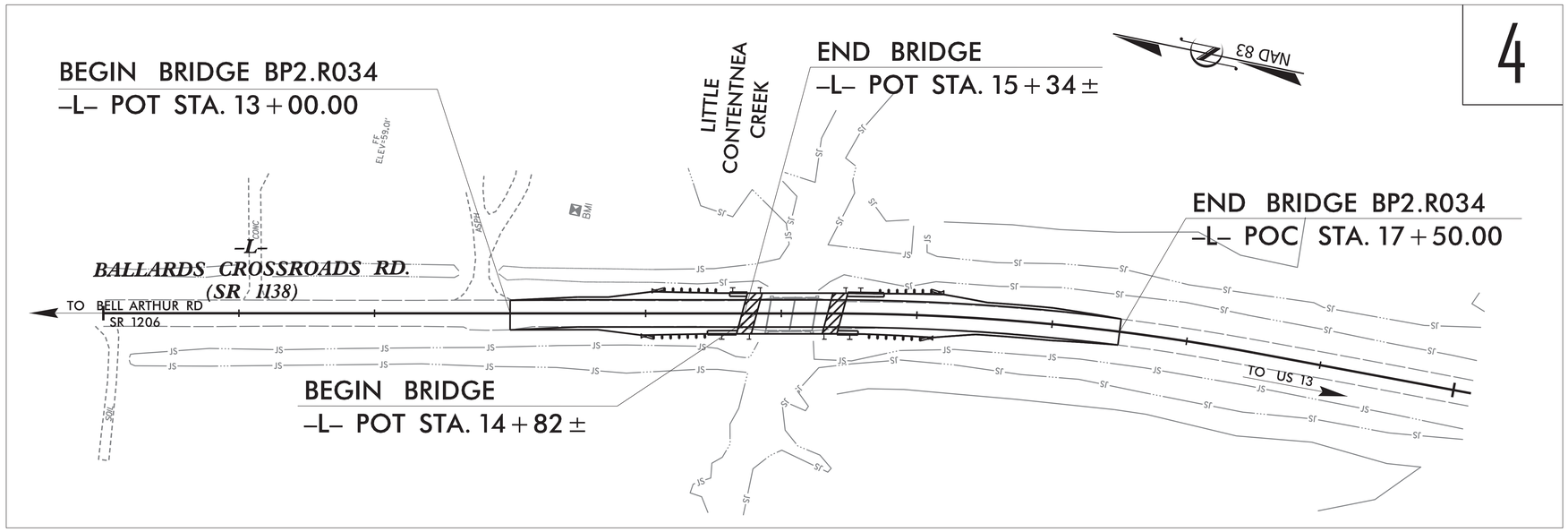

4

THIS PROJECT CONTAINS EROSION CONTROL PLANS FOR CLEARING AND GRUBBING PHASE OF CONSTRUCTION.

THIS PROJECT HAS BEEN DESIGNED TO SENSITIVE WATERSHED STANDARDS.

ENVIRONMENTALLY SENSITIVE AREA(S) EXIST ON THIS PROJECT

Refer To E. C. Special Provisions for Special Considerations.

GRAPHIC SCALE

50 25 0 50 100
PLANS

THESE EROSION AND SEDIMENT CONTROL PLANS COMPLY WITH THE REGULATIONS SET FORTH BY THE NCG 010000 GENERAL STORMWATER CONSTRUCTION PERMIT ISSUED BY THE NORTH CAROLINA DEPARTMENT OF ENVIRONMENTAL QUALITY DIVISION OF ENERGY, MINERAL, AND LAND RESOURCES.

AMT

Prepared In the Office of:

A. MORTON THOMAS AND ASSOCIATES, INC.
900 RIDGEFIELD DRIVE, SUITE 325 • RALEIGH, NC 27609
(919) 855-9989 • NC LICENSE NO. F-1049
WWW.AMTENGINEERING.COM

Designed by:

Kimi Schmidt, P.E. — NAME
4785 — LEVEL III CERTIFICATION NO.

Roadway Standard Drawings

The "Roadway Standard Drawings"- Roadway Design Unit - N. C. Department of Transportation - Raleigh, N. C., dated January 2024 and the latest revision thereto are applicable to this project and by reference hereby are considered a part of these plans.

PROJECT REFERENCE NO.	SHEET NO.
BP2.R034	EC-02

ROADWAY DESIGN ENGINEER	HYDRAULICS ENGINEER
NORTH CAROLINA PROFESSIONAL SEAL 30932 ENGINEER ROBERT A. WILLIAMS 5/22/2025	NORTH CAROLINA PROFESSIONAL SEAL 53931 ENGINEER ETHAN C. SCHMIDT 5/22/2025

DIVISION OF HIGHWAYS
STATE OF NORTH CAROLINA

EROSION & SEDIMENT CONTROL LEGEND

Std. #	Description	Symbol
1605.01	Temporary Silt Fence	
1606.01	Special Sediment Control Fence	
1622.01	Temporary Berms and Slope Drains	
1630.02	Silt Basin Type B	
1630.03	Temporary Silt Ditch	TSD
1630.04	Stilling Basin	
1630.05	Temporary Diversion	TD
1630.06	Special Stilling Basin	
1630.07	Skimmer Basin	
1630.08	Tiered Skimmer Basin	
1630.09	Earthen Dam with Skimmer	
	Infiltration Basin	
	Rock Inlet Sediment Trap:	
1632.01	Type A	A
1632.02	Type B	B
1632.03	Type C	C

Std. #	Description	Symbol
1633.01	Temporary Rock Silt Check Type A	
1633.02	Temporary Rock Silt Check Type B	
1633.03	Temporary Rock Silt Check Type A with Excelsior Matting and Flocculant	
1634.01	Temporary Rock Sediment Dam Type A	
1634.02	Temporary Rock Sediment Dam Type B	
1635.01	Rock Pipe Inlet Sediment Trap Type A	A
1635.02	Rock Pipe Inlet Sediment Trap Type B	B
1636.01	Excelsior Wattle Check	
1636.01	Excelsior Wattle Check with Flocculant	
1636.01	Coir Fiber Wattle Check	
1636.01	Coir Fiber Wattle Check with Flocculant	
1636.02	Silt Fence Excelsior Wattle Break	EW
	Silt Fence Coir Fiber Wattle Break	CFW
1636.03	Excelsior Wattle Barrier	—EW—EW—EW—
1636.03	Coir Fiber Wattle Barrier	—CFW—CFW—CFW—

PROJECT REFERENCE NO.	SHEET NO.
BP2.R034	EC-2A

SILT FENCE COIR FIBER WATTLE BREAK DETAIL

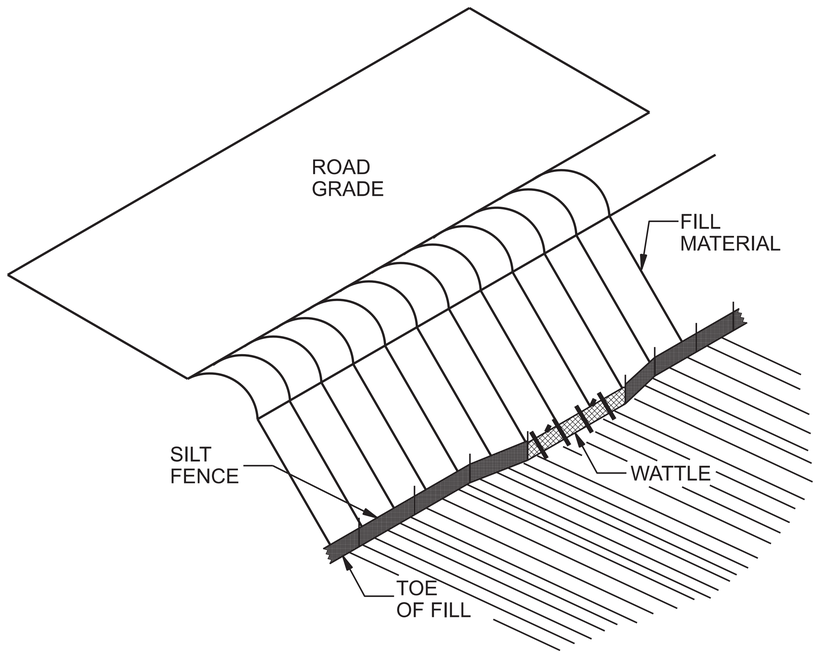

ISOMETRIC VIEW

NOTES:

USE MINIMUM 12 IN. DIAMETER COIR FIBER (COCONUT FIBER) WATTLE AND LENGTH OF 10 FT.

EXCAVATE A 1 TO 2 INCH TRENCH FOR WATTLE TO BE PLACED.

DO NOT PLACE WATTLE ON TOE OF SLOPE.

USE 2 FT. WOODEN STAKES WITH A 2 IN. BY 2 IN. NOMINAL CROSS SECTION.

INSTALL A MINIMUM OF 2 UPSLOPE STAKES AND 4 DOWNSLOPE STAKES AT AN ANGLE TO WEDGE WATTLE TO GROUND.

PROVIDE STAPLES MADE OF 0.125 IN. DIAMETER STEEL WIRE FORMED INTO A U SHAPE NOT LESS THAN 12" IN LENGTH.

INSTALL STAPLES APPROXIMATELY EVERY 1 LINEAR FOOT ON BOTH SIDES OF WATTLE AND AT EACH END TO SECURE IT TO THE SOIL.

WATTLE INSTALLATION CAN BE ON OUTSIDE OF THE SILT FENCE AS DIRECTED.

INSTALL TEMPORARY SILT FENCE IN ACCORDANCE WITH SECTION 1605 OF THE STANDARD SPECIFICATIONS.

INSET A

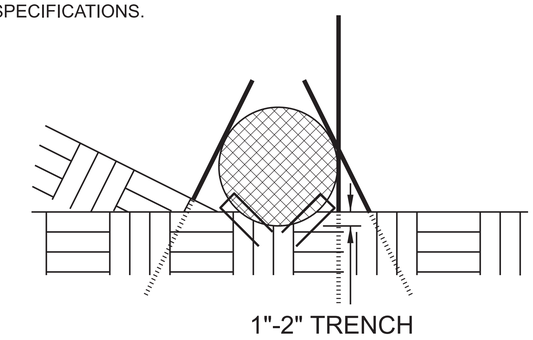

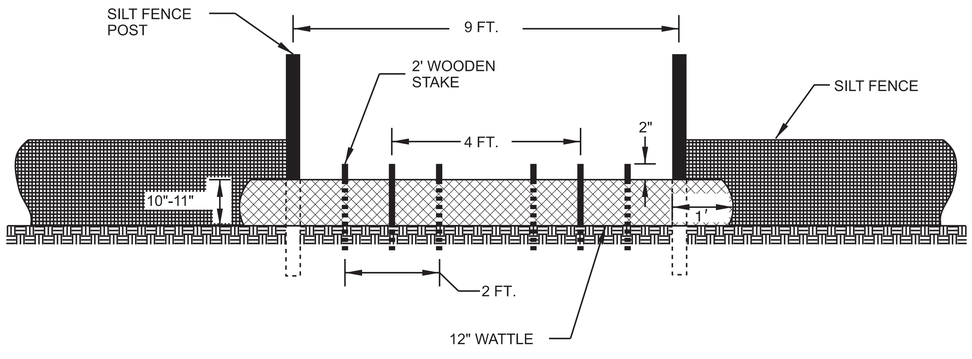

VIEW FROM SLOPE

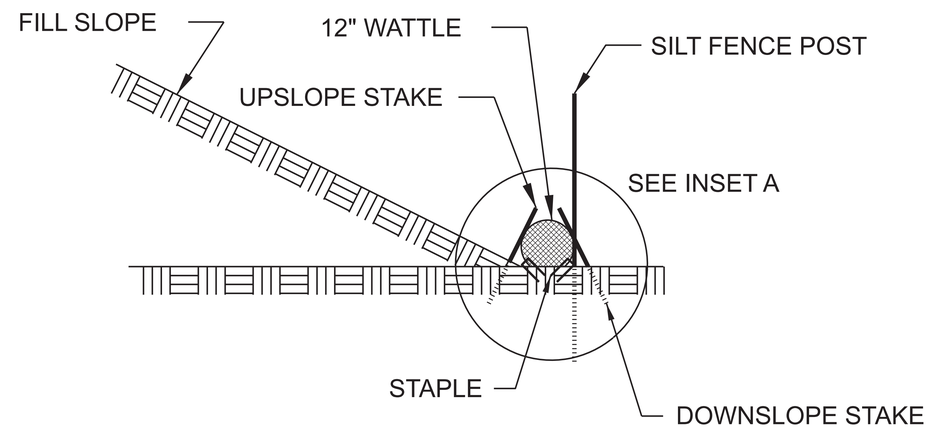

SIDE VIEW

PROJECT REFERENCE NO.	SHEET NO.
BP2.R034	EC-2B

ONSITE CONCRETE WASHOUT STRUCTURE WITH LINER

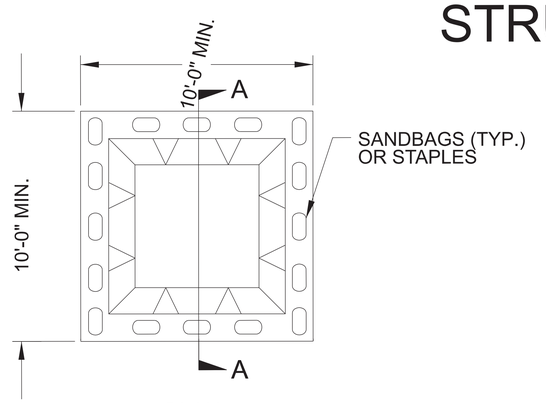

PLAN

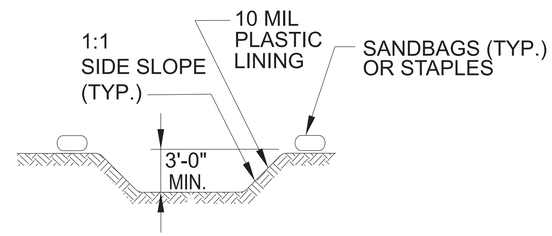

SECTION A-A

NOTES:
1. ACTUAL LOCATION DETERMINED IN FIELD

2. THE CONCRETE WASHOUT STRUCTURES SHALL BE MAINTAINED WHEN THE LIQUID AND/OR SOLID REACHES 75% OF THE STRUCTURES CAPACITY TO PROVIDE ADEQUATE HOLDING CAPACITY WITH A MINIMUM 12 INCHES OF FREEBOARD.

3.CONCRETE WASHOUT STRUCTURE NEEDS TO BE CLEARY MARKED WITH SIGNAGE NOTING DEVICE.

BELOW GRADE WASHOUT STRUCTURE

NOT TO SCALE

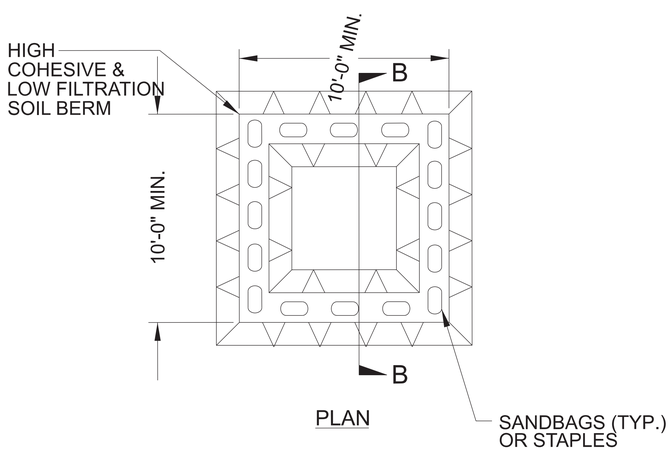

PLAN

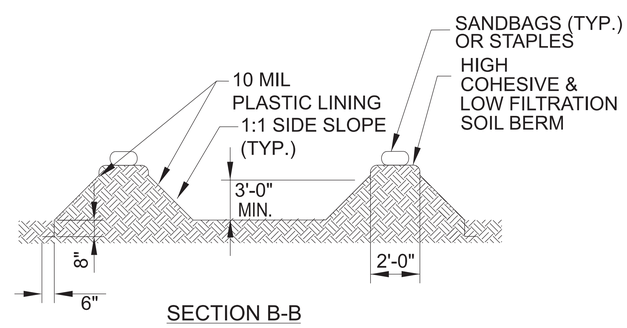

SECTION B-B

NOTES:
1. ACTUAL LOCATION DETERMINED IN FIELD

2. THE CONCRETE WASHOUT STRUCTURES SHALL BE MAINTAINED WHEN THE LIQUID AND/OR SOLID REACHES 75% OF THE STRUCTURES CAPACITY TO PROVIDE ADEQUATE HOLDING CAPACITY WITH A MINIMUM 12 INCHES OF FREEBOARD.

3.CONCRETE WASHOUT STRUCTURE NEEDS TO BE CLEARY MARKED WITH SIGNAGE NOTING DEVICE.

ABOVE GRADE WASHOUT STRUCTURE

NOT TO SCALE

PROJECT REFERENCE NO.	SHEET NO.
BP2.R034	EC-3

DIVISION OF HIGHWAYS
STATE OF NORTH CAROLINA

SOIL STABILIZATION SUMMARY SHEET

MATTING FOR EROSION CONTROL

CONST SHEET NO.	LINE	FROM STATION	TO STATION	SIDE	ESTIMATE (SY)
			SUBTOTAL		0
MISCELLANEOUS MATTING TO BE INSTALLED AS DIRECTED BY THE ENGINEER					1,540
				TOTAL	1,540
				SAY	1,550

PERMANENT SOIL REINFORCEMENT MAT

CONST SHEET NO.	LINE	FROM STATION	TO STATION	SIDE	ESTIMATE (SY)

PROJECT REFERENCE NO.	SHEET NO.
BP2.R034	EC-3A

DIVISION OF HIGHWAYS
STATE OF NORTH CAROLINA

SOIL STABILIZATION TIMEFRAMES

SITE DESCRIPTION	STABILIZATION TIME	TIMEFRAME EXCEPTIONS
PERIMETER DIKES, SWALES, DITCHES AND SLOPES	7 DAYS	NONE
HIGH QUALITY WATER (HQW) ZONES	7 DAYS	NONE
SLOPES STEEPER THAN 3:1	7 DAYS	IF SLOPES ARE 10' OR LESS IN LENGTH AND ARE NOT STEEPER THAN 2:1, 14 DAYS ARE ALLOWED.
SLOPES 3:1 TO 4:1	14 DAYS	7 DAYS FOR SLOPES GREATER THAN 50' IN LENGTH WITH SLOPES STEEPER THAN 4:1. 7 DAYS FOR PERIMETER DIKES, SWALES, DITCHES PERIMETER SLOPES, AND HQW ZONES
ALL OTHER AREAS WITH SLOPES FLATTER THAN 4:1	14 DAYS	7 DAYS FOR PERIMETER DIKES, SWALES, DITCHES PERIMETER SLOPES, AND HQW ZONES

5/26/20

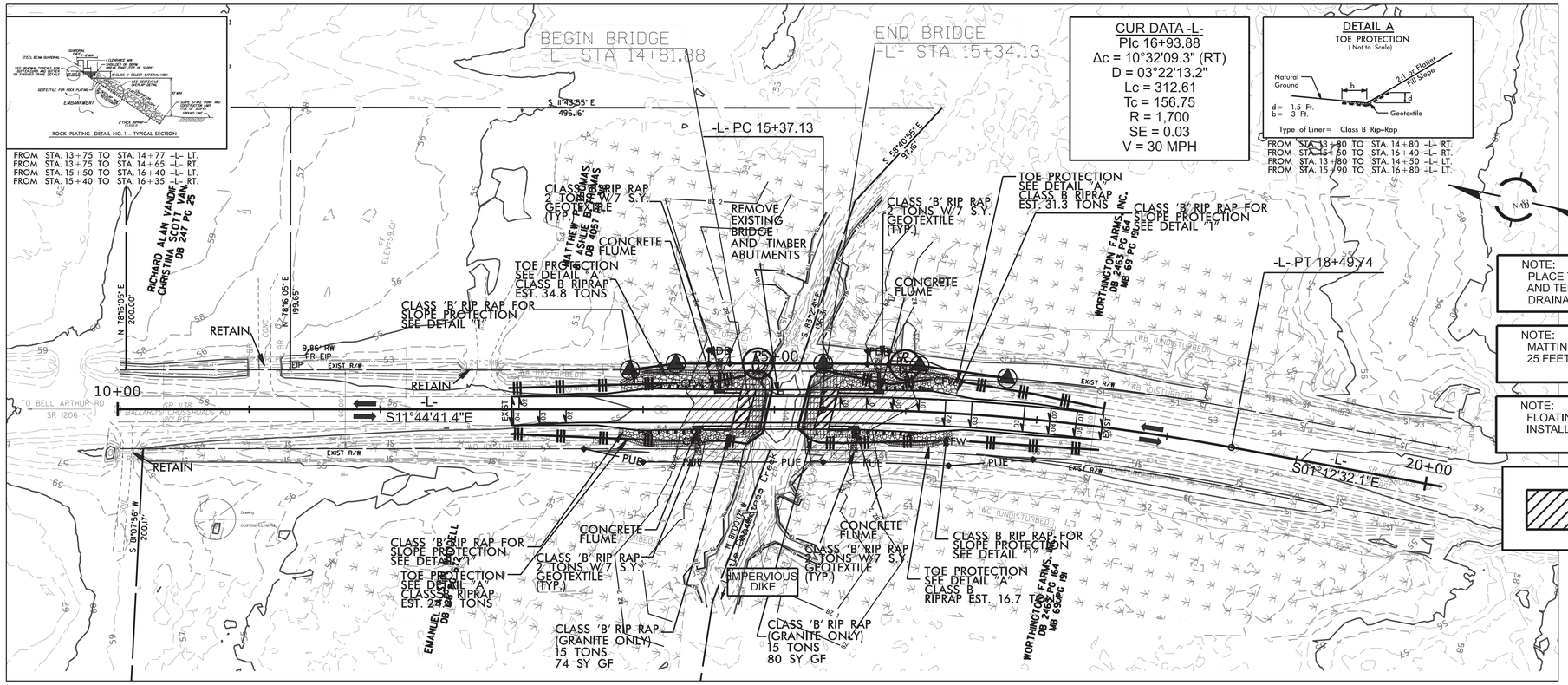

CUR DATA -L-
PIc 16+93.88
Δc = 10°32'09.3" (RT)
D = 03°22'13.2"
Lc = 312.61
Tc = 156.75
R = 1,700
SE = 0.03
V = 30 MPH

DETAIL A
TOE PROTECTION
(Not to Scale)

Type of Liner = Class B Rip–Rap

FROM STA. 13+80 TO STA. 14+80 -L- RT.
FROM STA. 15+50 TO STA. 16+40 -L- RT.
FROM STA. 13+80 TO STA. 14+50 -L- LT.
FROM STA. 15+90 TO STA. 16+80 -L- LT.

PROJECT REFERENCE NO.	SHEET NO.
BP2.R034	EC-04/CONST-04
R/W SHEET NO.	
ROADWAY DESIGN ENGINEER	HYDRAULICS ENGINEER

ROADWAY DESIGN ENGINEER: NORTH CAROLINA PROFESSIONAL SEAL 30932 ENGINEER ROBERT A. WILLIAMS 5/22/2025

HYDRAULICS ENGINEER: NORTH CAROLINA PROFESSIONAL SEAL 53931 ENGINEER KIMI C. SCHMIDT 5/22/2025

CLEARING AND GRUBBING
EROSION CONTROL FOR
CONSTRUCTION SHEET 04

NOTE:
PLACE TEMPORARY ROCK SEDIMENT DAMS TYPE - B AND TEMPORARY ROCK SILT CHECKS TYPE - A AT DRAINAGE OUTLETS.

NOTE:
MATTING WITH NYLON MESH CANNOT BE USED WITHIN 25 FEET OF THE TOP OF STREAM BANK OR OPEN WATERS.

NOTE:
FLOATING TURBIDITY CURTAIN TO BE USED WHILE INSTALLING/REMOVING IMPERVIOUS DIKES.

ENVIRONMENTALLY SENSITIVE AREA
SEE PROJECT SPECIAL PROVISIONS

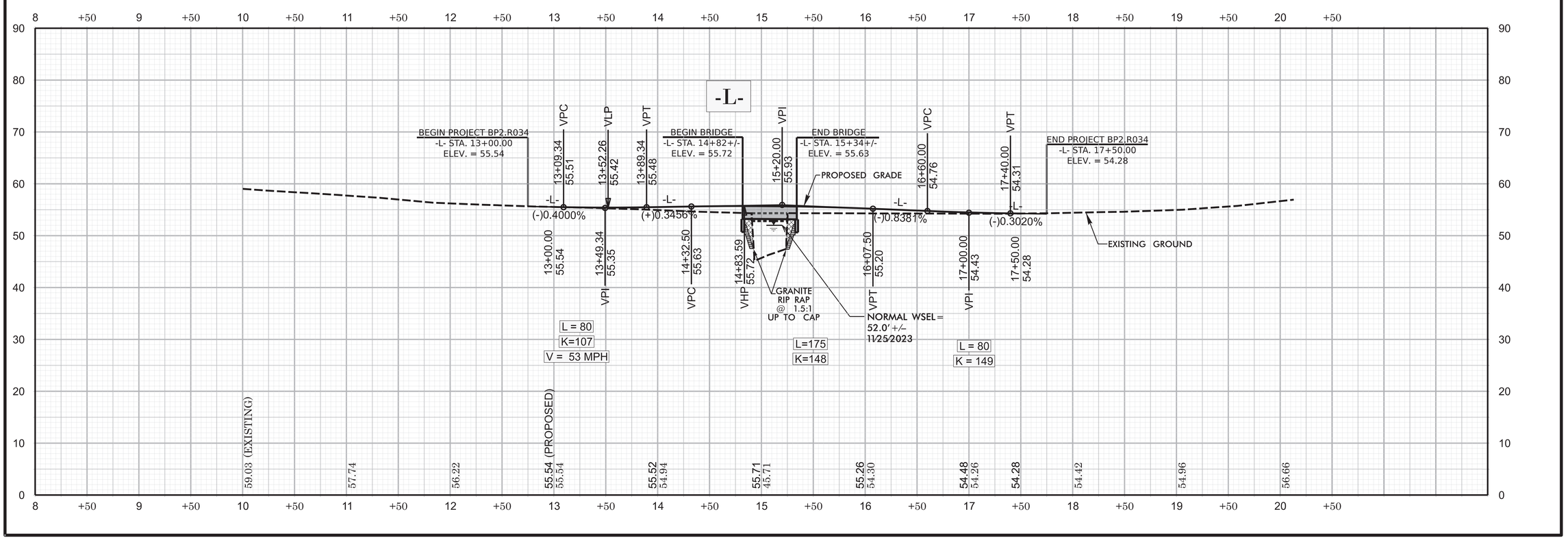

5/26/20

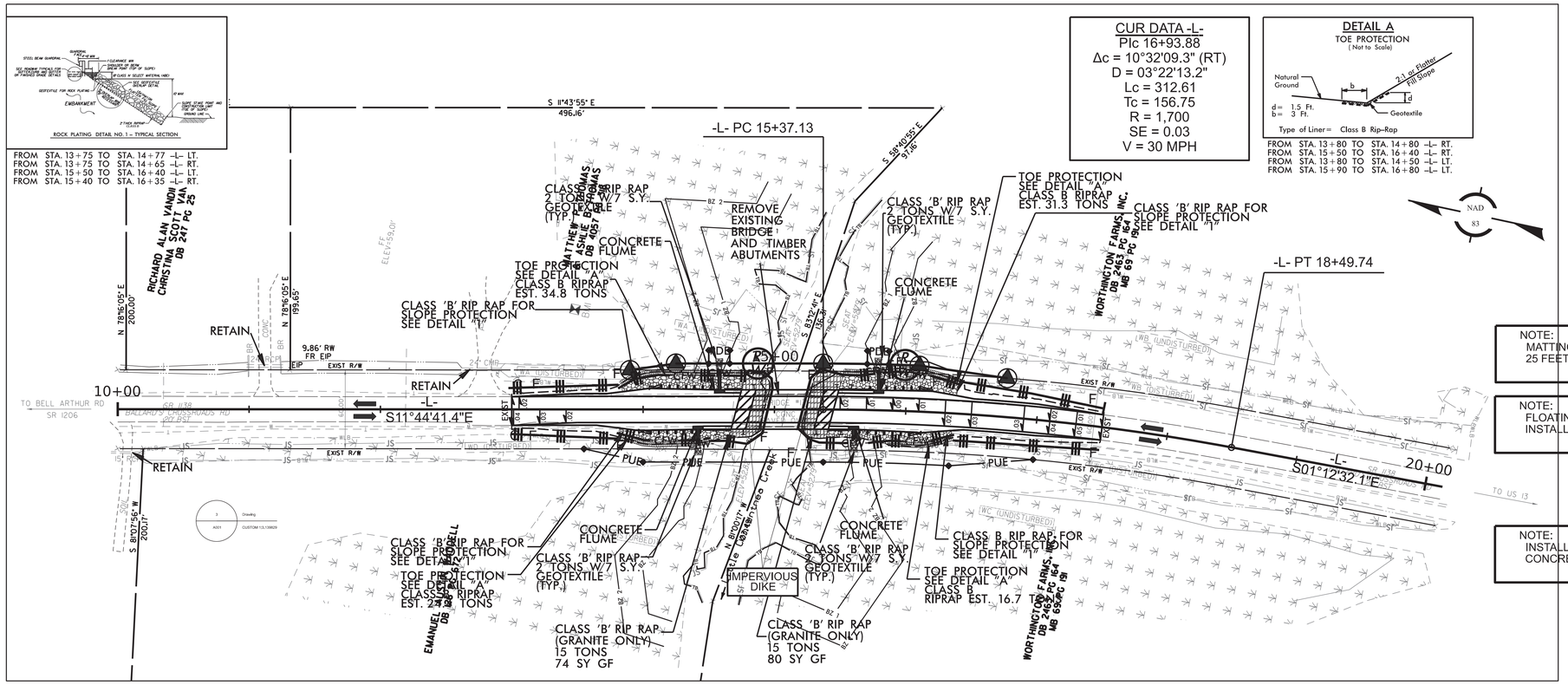

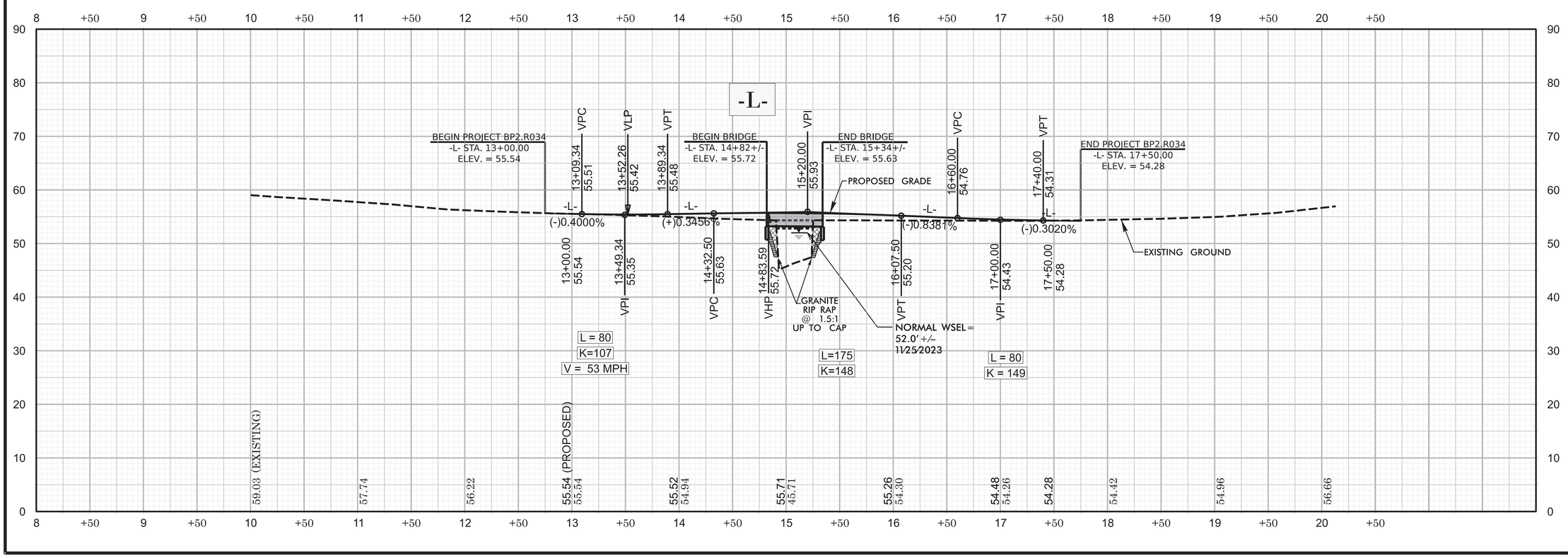

PROJECT REFERENCE NO.	SHEET NO.
BP2.R034	EC-05/CONST-04
R/W SHEET NO.	

ROADWAY DESIGN ENGINEER
NORTH CAROLINA PROFESSIONAL SEAL 30932 ENGINEER ROBERT A. WILLIAMS
9/22/2025

HYDRAULICS ENGINEER
NORTH CAROLINA PROFESSIONAL SEAL 53931 ENGINEER KIMI C. SCHMIDT
9/22/2025

FINAL
EROSION CONTROL FOR
CONSTRUCTION SHEET 04

PLACE MATTING FOR EROSION CONTROL ON SLOPES ADJACENT TO PERMITTED WETLANDS AS WORK ALLOWS.

NOTE:
MATTING WITH NYLON MESH CANNOT BE USED WITHIN 25 FEET OF THE TOP OF STREAM BANK OR OPEN WATERS.

NOTE:
FLOATING TURBIDITY CURTAIN TO BE USED WHILE INSTALLING/REMOVING IMPERVIOUS DIKES.

NOTE:
INSTALL COIR FIBER WATTLE AT UPSTREAM END OF CONCRETE FLUME.

STATE	STATE PROJECT REFERENCE NO.	SHEET NO.	TOTAL SHEETS
N.C.	BP2.R034	RF-1	
STATE PROJ. NO.	F. A. PROJ. NO.	DESCRIPTION	

PLANTING DETAILS

SEEDLING / LINER BAREROOT PLANTING DETAIL

HEALING IN

1. Locate a healing-in site in a shady, well protected area.
2. Excavate a flat bottom trench 12 inches deep and provide drainage.

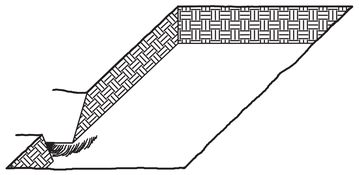

3. Backfill the trench with 2 inches well rotted sawdust. Place a 2 inch layer of well rotted sawdust at a sloping angle at one end of the trench.

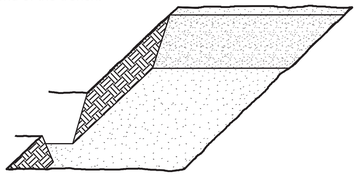

4. Place a single layer of plants against the sloping end so that the root collar is at ground level.

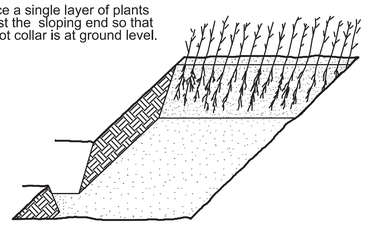

5. Place a 2 inch layer of well rotted sawdust over the roots maintaining a sloping angle.

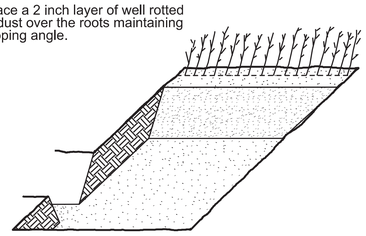

6. Repeat layers of plants and sawdust as necessary and water thoroughly.

DIBBLE PLANTING METHOD
USING THE KBC PLANTING BAR

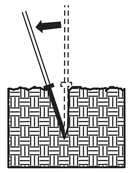

1. Insert planting bar as shown and pull handle toward planter.

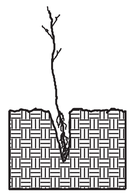

2. Remove planting bar and place seedling at correct depth.

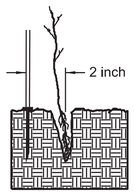

3. Insert planting bar 2 inches toward planter from seedling.

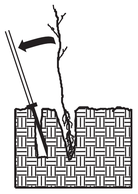

4. Pull handle of bar toward planter, firming soil at bottom.

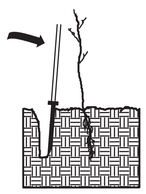

5. Push handle forward firming soil at top.

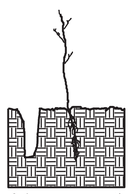

6. Leave compaction hole open. Water thoroughly.

PLANTING NOTES:

PLANTING BAG
During planting, seedlings shall be kept in a moist canvas bag or similar container to prevent the root systems from drying.

KBC PLANTING BAR
Planting bar shall have a blade with a triangular cross section, and shall be 12 inches long, 4 inches wide and 1 inch thick at center.

ROOT PRUNING
All seedlings shall be root pruned, if necessary, so that no roots extend more than 10 inches below the root collar.

REFORESTATION

☐ TREE REFORESTATION SHALL BE PLANTED 6 FT. TO 10 FT. ON CENTER, RANDOM SPACING, AVERAGING 8 FT. ON CENTER, APPROXIMATELY 680 PLANTS PER ACRE.

REFORESTATION

MIXTURE, TYPE, SIZE, AND FURNISH SHALL CONFORM TO THE FOLLOWING:

34% LIRIODENDRON TULIPIFERA	TULIP POPLAR	12 in - 18 in BR
33% PLATANUS OCCIDENTALIS	AMERICAN SYCAMORE	12 in - 18 in BR
33% BETULA NIGRA	RIVER BIRCH	12 in - 18 in BR

REFORESTATION DETAIL SHEET

N.C.D.O.T. - ROADSIDE ENVIRONMENTAL UNIT

5/26/20

Note: "Approximate quantities only. Unclassified excavation, borrow excavation, shoulder borrow, fine grading, clearing and grubbing, breaking of existing pavement, and removal of existing pavement will be paid for at the contract lump sum price for grading."

DOCUMENT NOT CONSIDERED FINAL UNLESS ALL SIGNATURES COMPLETED

0 10 20

BP2.R034
X 001

WETLAND AREA

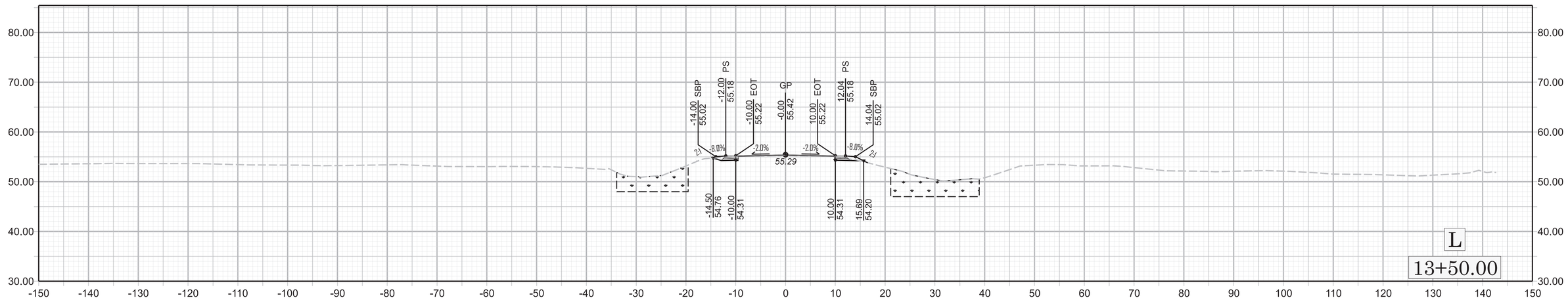

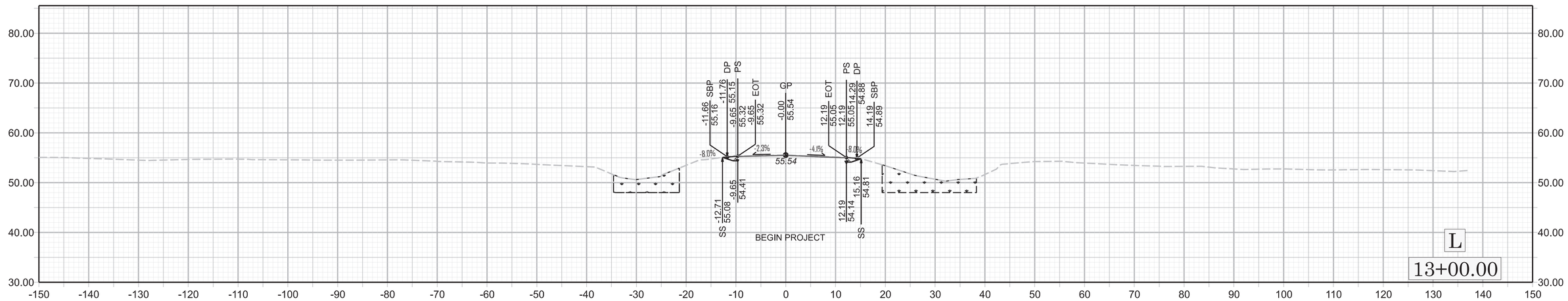

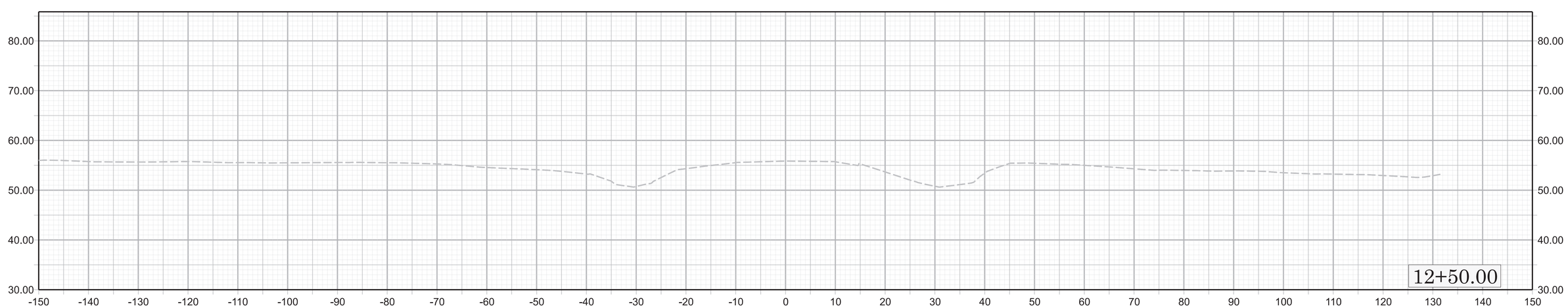

5/26/20

WETLAND AREA

ROCK PLATING

DOCUMENT NOT CONSIDERED FINAL UNLESS ALL SIGNATURES COMPLETED

0 10 20

BP2.R034

X | 002

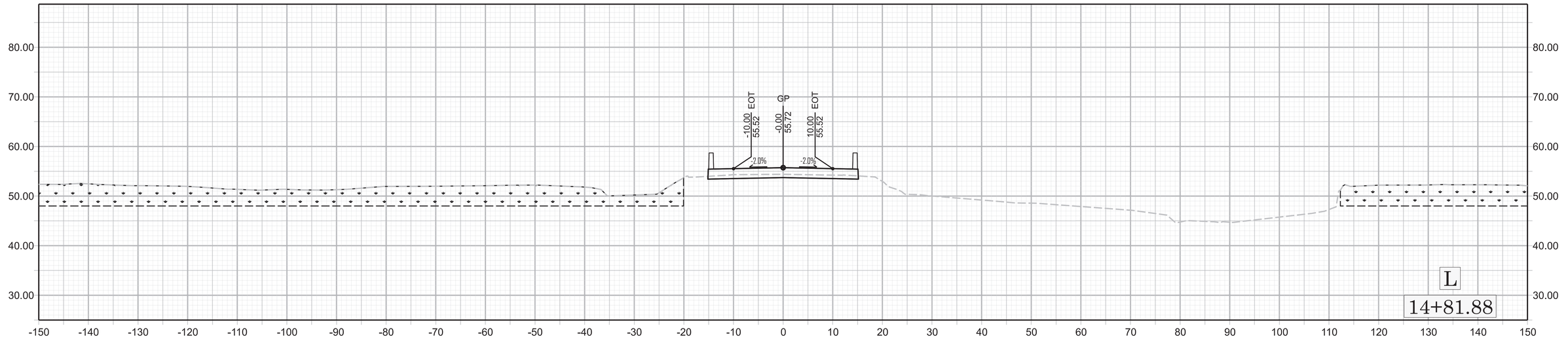

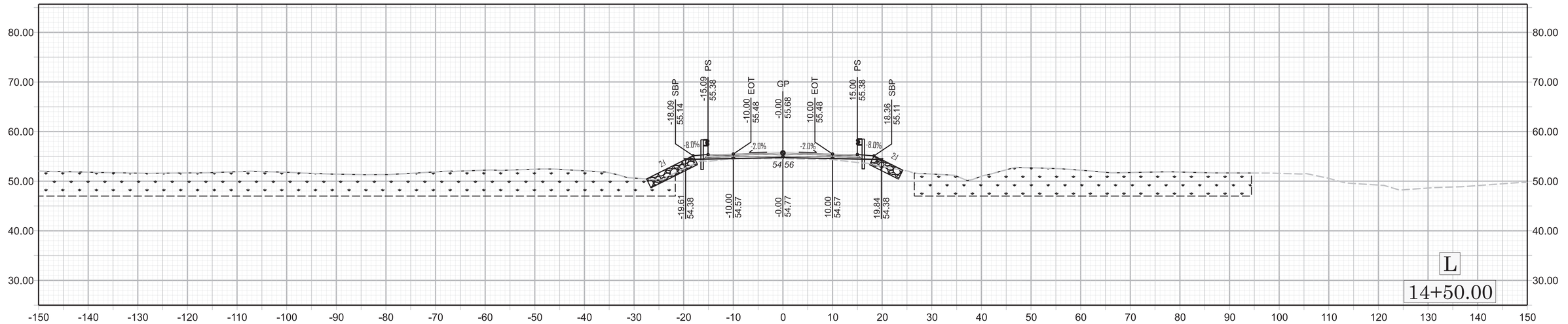

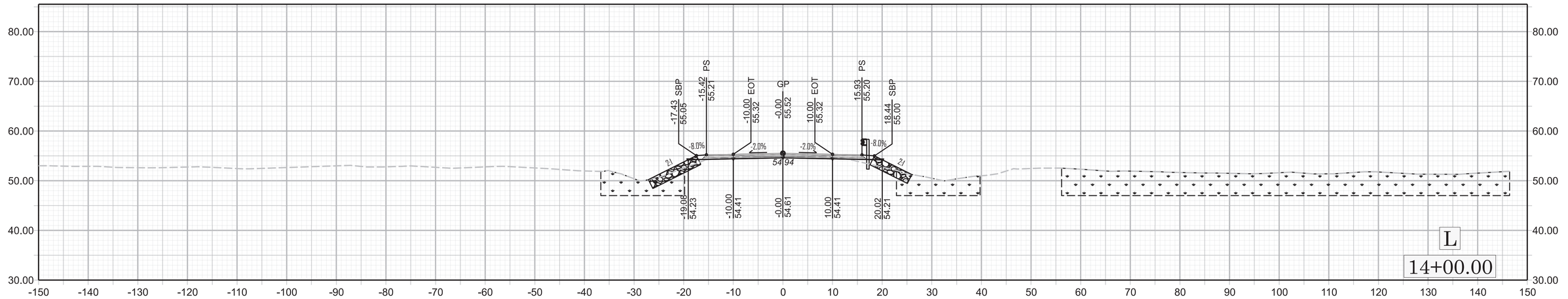

5/26/20

DOCUMENT NOT CONSIDERED FINAL
UNLESS ALL SIGNATURES COMPLETED

0 10 20

BP2.R034
X I 003

WETLAND AREA

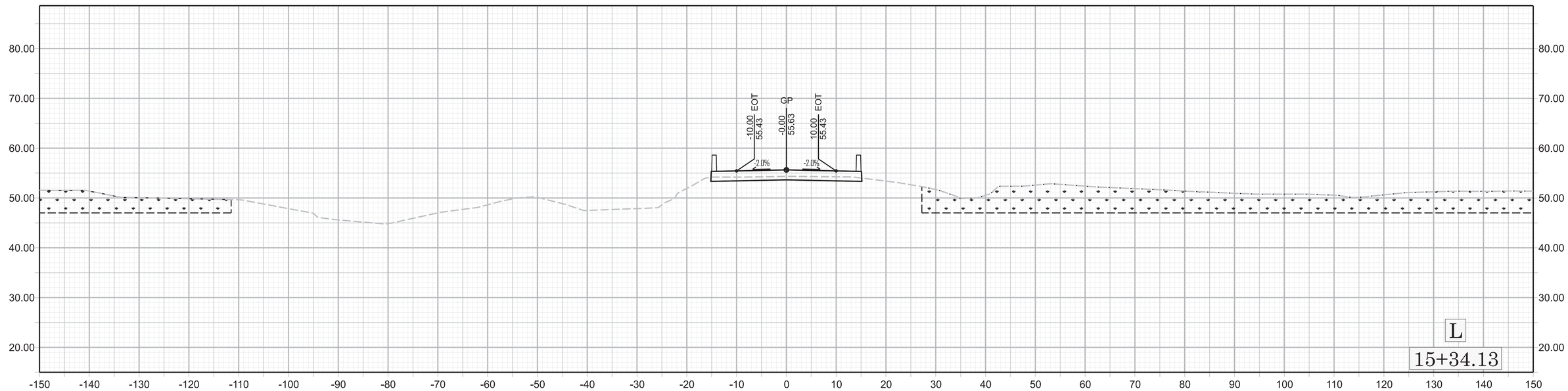

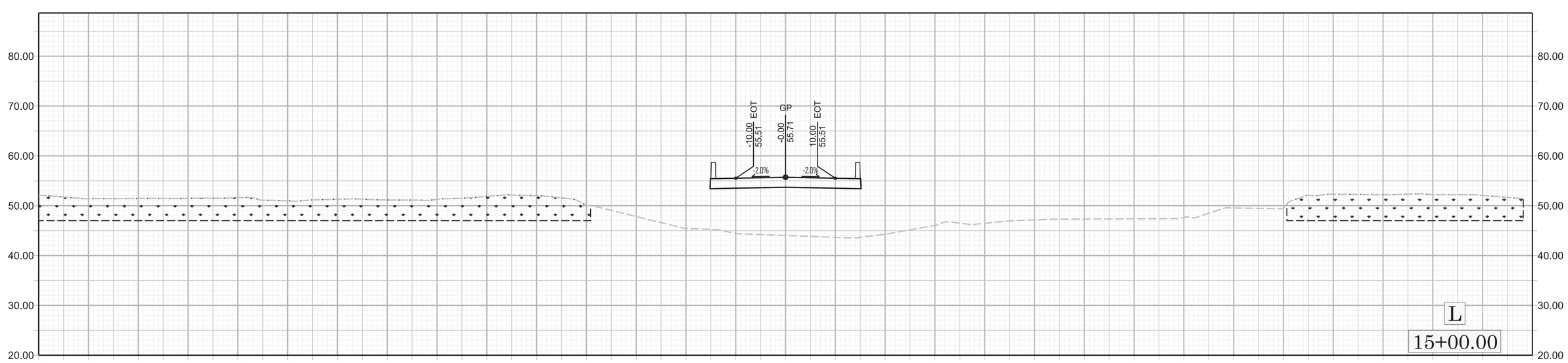

5/26/20

DOCUMENT NOT CONSIDERED FINAL UNLESS ALL SIGNATURES COMPLETED

0 10 20

BP2.R034
X 004

WETLAND AREA
ROCK PLATING

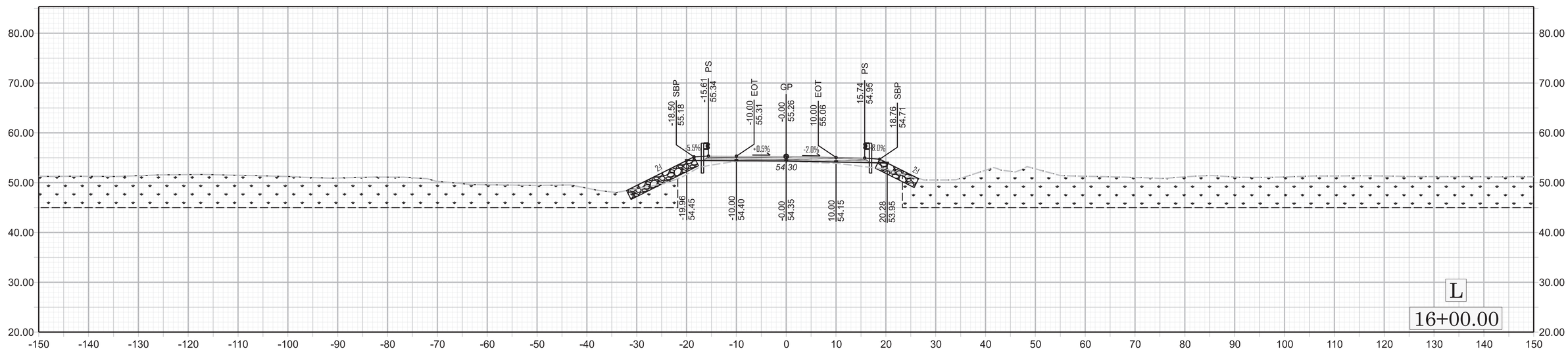

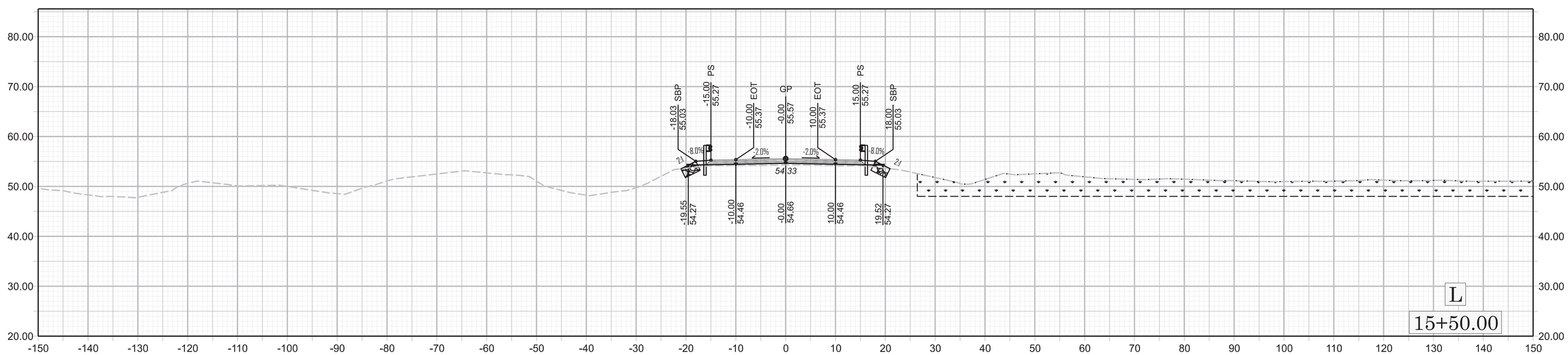

5/26/20

WETLAND AREA

ROCK PLATING

DOCUMENT NOT CONSIDERED FINAL UNLESS ALL SIGNATURES COMPLETED

0 10 20

BP2.R034

X | 005

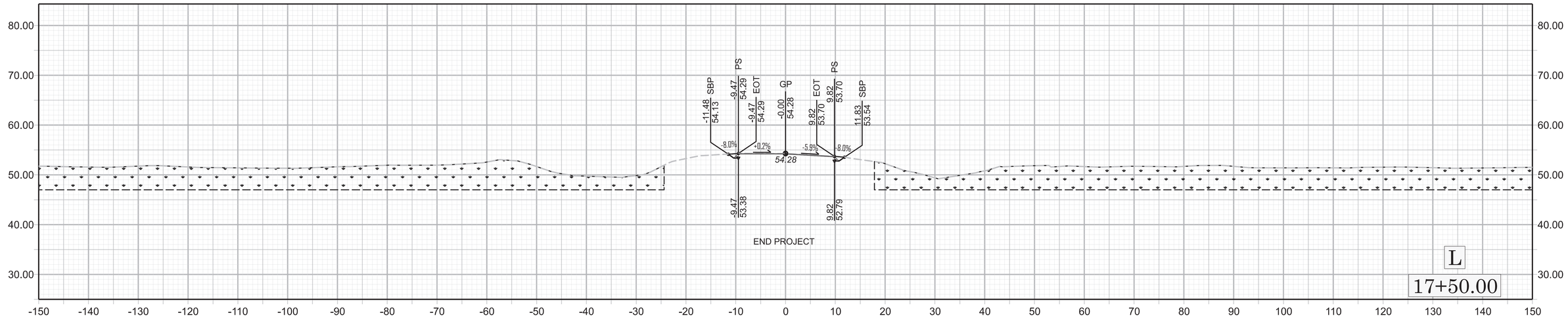

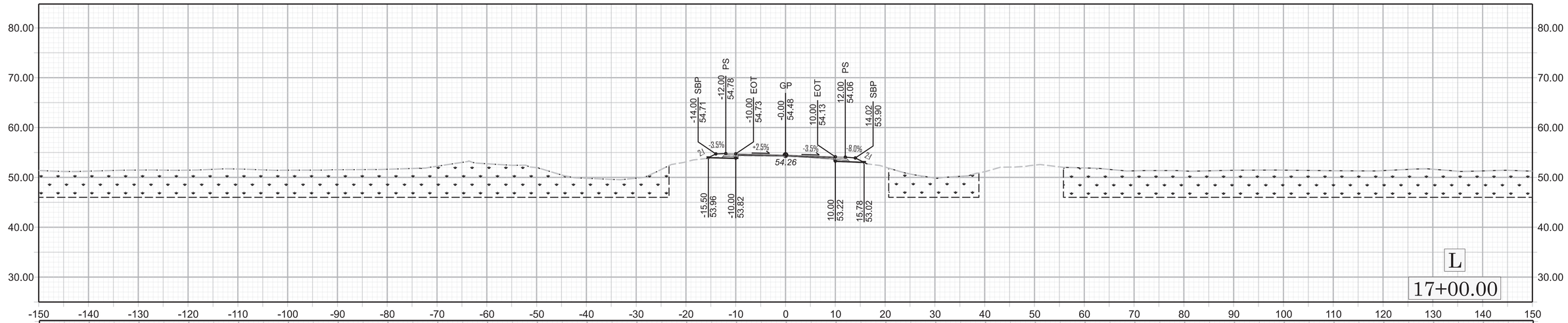

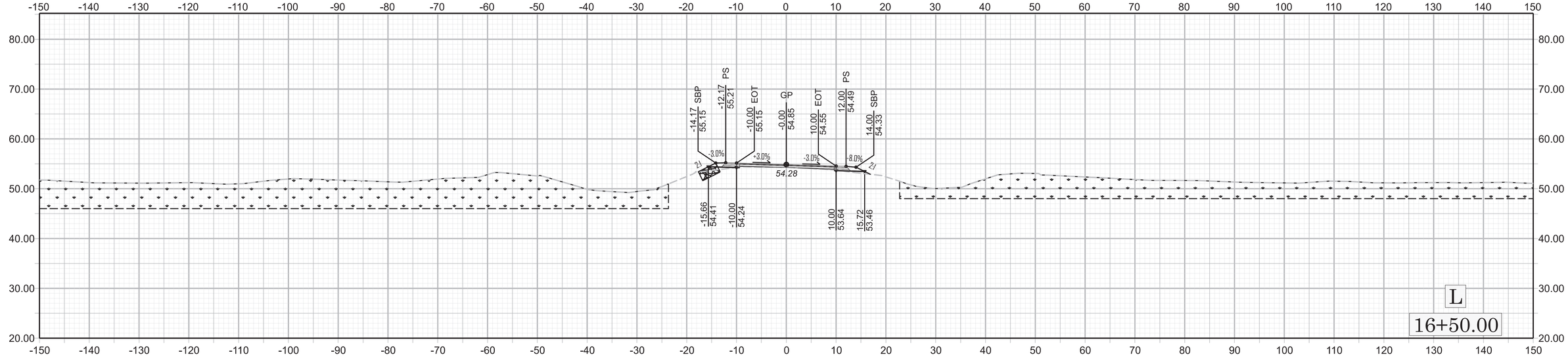

09/08/99

TIP PROJECT: BP2.R034

CONTRACT:

See Sheet 1A For Index of Sheets
See Sheet 1B For Conventinal Symbols

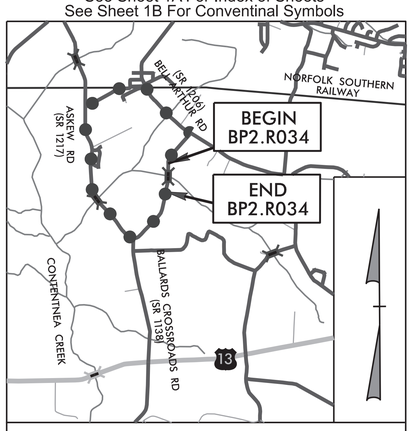

VICINITY MAP
● ● ● OFFSITE DETOUR N.T.S.

STATE OF NORTH CAROLINA
DIVISION OF HIGHWAYS

PITT COUNTY

LOCATION: *REPLACE BRIDGE NO. 131 OVER LITTLE CONTENTNEA CREEK ON SR 1138 (BALLARDS CROSSROADS RD.)*

TYPE OF WORK: *GRADING, DRAINAGE, PAVING, AND STRUCTURE*

STATE	STATE PROJECT REFERENCE NO.	SHEET NO.	TOTAL SHEETS
N.C.	BP2.R034	1	

STATE PROJ. NO.	F. A. PROJ. NO.	DESCRIPTION
BP2.R034.1	N/A	PE
BP2.R034.2		ROW/UTILITIES
BP2.R034.3		CONSTRUCTION

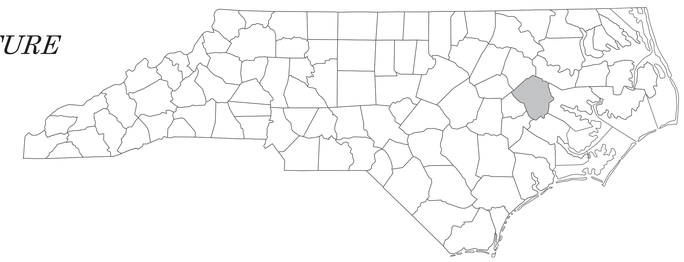

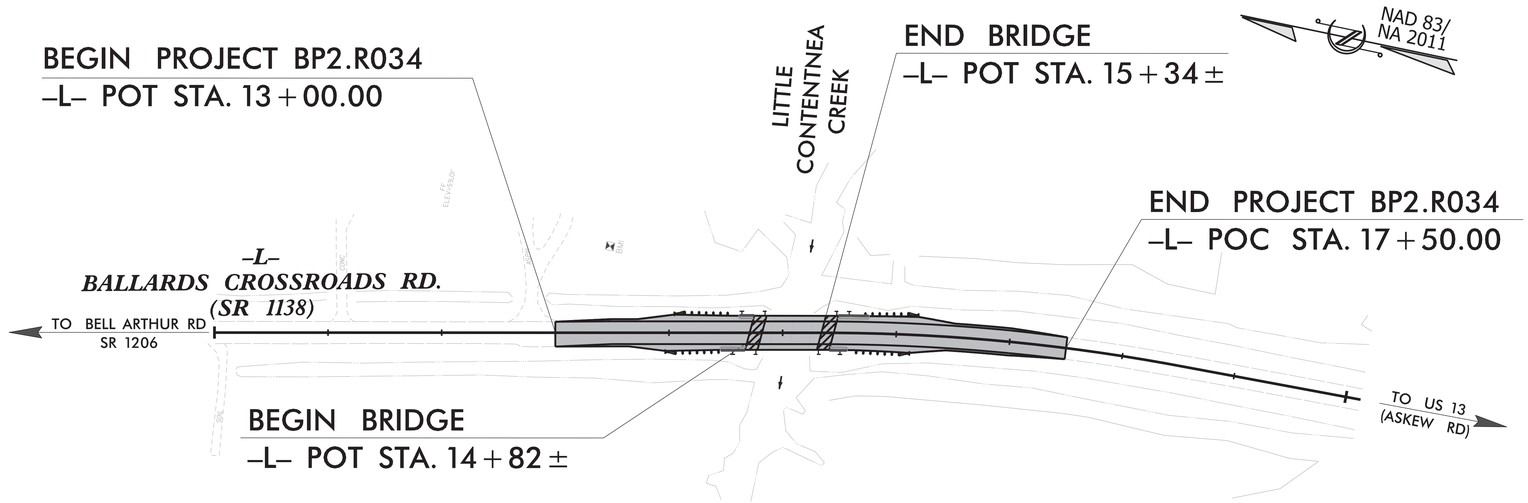

FINAL PLAN SET
5–12–2025

DOCUMENT NOT CONSIDERED FINAL UNLESS ALL SIGNATURES COMPLETED

STRUCTURES

DESIGN DATA

ADT 2024 = 380
ADT 2040 = 440
K = N/A
D = N/A
T = N/A
V = 60 MPH

FUNC CLASS =
LOCAL
SUBREGIONAL TIER

PROJECT LENGTH

LENGTH OF ROADWAY TIP PROJECT BP2.R034	=	*0.075 MILES*
LENGTH OF STRUCTURE TIP PROJECT BP2.R034	=	*0.01 MILES*
TOTAL LENGTH TIP PROJECT BP2.R034	=	*0.085 MILES*

Prepared in the Office of:

AMT A. MORTON THOMAS AND ASSOCIATES, INC.
900 RIDGEFIELD DRIVE, SUITE 325•RALEIGH, NC 27609
(919) 855-9989•NC LICENSE NO. F-1049
WWW.AMTENGINEERING.COM

2024 STANDARD SPECIFICATIONS

RIGHT OF WAY DATE:
NOVEMBER 15, 2024

LETTING DATE:
JUNE 24, 2025

WESLEY D. HEVENER, PE
PROJECT ENGINEER

HADLEY BOLINSKY, EIT
PROJECT DESIGN ENGINEER

STRUCTURES ENGINEER

NORTH CAROLINA PROFESSIONAL SEAL 036583 ENGINEER WESLEY D. HEVENER

Signed by:
Wes Hevener
DocuSigned by:
SIGNATURE: *P.E.* 5/22/2025

STATE OF NORTH CAROLINA • DEPARTMENT OF TRANSPORTATION

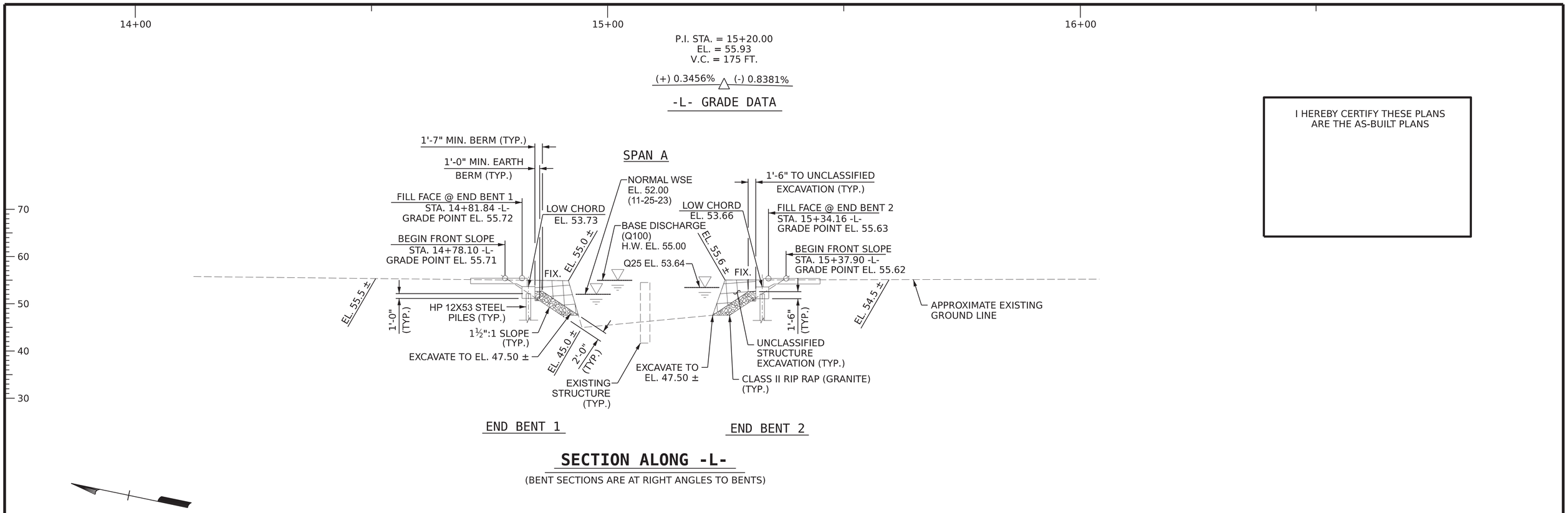

I HEREBY CERTIFY THESE PLANS ARE THE AS-BUILT PLANS

HORIZONTAL CURVE DATA -L-

PI = 16+93.88
Δ = 10°-32'-09.3" (RT.)
D = 3°-22'-13.2"
L = 312.61'
T =156.75'
R = 1,700'

PROJECT NO. BP2.R034.1

PITT COUNTY

STATION: 15+08.00 -L-

SHEET 1 OF 2 REPLACES BRIDGE NO. 730131

NORTH CAROLINA PROFESSIONAL SEAL 036583 ENGINEER WESLEY D. HEVNER

5/22/2025

DOCUMENT NOT CONSIDERED FINAL UNLESS ALL SIGNATURES COMPLETED

A. MORTON THOMAS AND ASSOCIATES, INC.
900 RIDGEFIELD DRIVE, SUITE 325 • RALEIGH, NC 27609
(919) 855-9989 • NC LICENSE NO. F-1049
WWW.AMTENGINEERING.COM

STATE OF NORTH CAROLINA
DEPARTMENT OF TRANSPORTATION
RALEIGH

GENERAL DRAWING

FOR BRIDGE ON SR 1138
OVER LITTLE CONTENTNEA CREEK
BETWEEN SR 1206 AND SR 1217

REVISIONS						SHEET NO.
NO.	BY:	DATE:	NO.	BY:	DATE:	S1-1
1			3			TOTAL SHEETS
2			4			15

DRAWN BY :	GAR	DATE :	5/25
CHECKED BY :	WDH	DATE :	5/25
DESIGN ENGINEER OF RECORD:	WDH	DATE :	5/25

5/12/2025
c:\users\gramboull\documents\pw-amt-02\dms39708\401_001_BP2R034_SMU_GD_S1-1.dgn
gramboull

SUMMARY OF PILE INFORMATION/INSTALLATION

(Blank entries indicate item is not applicable to structure)

End Bent / Bent No, Pile(s) #(-#) (e.g., "Bent 1, Piles 1-5")	Number of Piles per Line	Factored Resistance per Pile KIPS	Pile Cut-Off (Top of Pile) Elevation FT	Estimated Pile Length per Pile FT	Scour Critical Elevation FT	Driven Piles			Predrilling for Piles **			Drilled-In Piles		
						Minimum Pile Tip (Tip No Higher Than) Elevation FT	Required Driving Resistance (RDR)* per pile KIPS	Pile Redrives Quantity EACH	Predrilling Length per Pile LIN FT	Predrilling Elevation (Elevation Not To Predrill Below) FT	Maximum Predrilling Diameter INCHES	Pile Excavation (Bottom of Hole) Elevation FT	Pile Excavation Not In Soil per Pile LIN FT	Pile Excavation In Soil per Pile LIN FT
End Bent No.1, Piles 1-5	5	170	51.27	85			245	5						
End Bent No.2, Piles 1-5	5	170	51.16	85			245	5						
TOTAL QUANTITY:	10							10						

$$^{*}\,RDR = \frac{Factored\ Resistance + Factored\ Drag\ Load + Factored\ Dead\ Load}{Dynamic\ Resistance\ Factor} + Nominal\ Drag\ Load\ Resistance + Nominal\ Resistance\ from\ Scourable\ Material$$

** Predrilling for Piles is required for end bents/bents with a predrilling length and at the Contractor's option for end bents/bents with predrilling information but no predrilling length.

PILE DESIGN INFORMATION

(Blank entries indicate item is not applicable to structure)

End Bent / Bent No, Pile(s) #(-#) (e.g., "Bent 1, Piles 1-5")	Factored Axial Load per Pile KIPS	Factored Drag Load per Pile KIPS	Factored Dead Load * per Pile KIPS	Dynamic Resistance Factor	Nominal Drag Resistance per Pile KIPS	Nominal Scour Resistance per Pile KIPS
End Bent No.1, Piles 1-5	170			0.70		
End Bent No.2, Piles 1-5	170			0.70		

* Factored Dead Load is factored weight of pile above the ground line.

SUMMARY OF DPT/PILE ORDER LENGTHS

(Blank entries indicate item is not applicable to structure)

Dynamic Pile Testing (DPT)		
End Bent / Bent No (e.g., "Bent 1 - Bent 3")	DPT Test Pile Length FT	DPT Testing Quantity EACH
End Bent No.1	90	1
End Bent No.2	90	1
TOTAL QUANTITY:		2

Pile Order Lengths for Concrete Piles	
End Bent / Bent No (e.g., "Bent 1 - Bent 3")	Pile Order Length Basis* EST or DPT

* EST = Pile order lengths from estimated pile lengths; DPT = Pile order lengths based on Dynamic Pile Testing. For groups of end bents/bents with pile order lengths based on DPT testing, the first end bent/bent no. listed for each group is the representative end bent/bent with the DPT.

PROJECT NO. BP2.R034.1

Pitt COUNTY

STATION: 15+08 -L-

NOTES:

1. The Pile Foundation Tables are based on the bridge substructure design and foundation recommendations sealed by a North Carolina Professional Engineer (Jinyoung Park, #032171) on 09-16-2024.
2. Total Pile Driving Equipment Setup quantity (not shown in Pile Foundation Tables) equals the number of driven piles, i.e., the number of piles with a Required Driving Resistance.
3. The Engineer may adjust the quantity for DPT Testing and Pipe Pile Plates when necessary.

NORTH CAROLINA PROFESSIONAL SEAL 036583 ENGINEER WESLEY D. HEVENER

5/22/2025

SIGNATURE DATE

DOCUMENT NOT CONSIDERED FINAL UNLESS ALL SIGNATURES COMPLETED

STATE OF NORTH CAROLINA
DEPARTMENT OF TRANSPORTATION
RALEIGH

PILE FOUNDATION TABLES

REVISIONS						SHEET NO. S1-2
NO.	BY:	DATE:	NO.	BY:	DATE:	TOTAL SHEETS
1			3			15
2			4			

BENCH MARK: 8" SPIKE IN 36' TRIPLE OAK, 77' RIGHT OF STA 13+48 -EL-, EL. 56.71

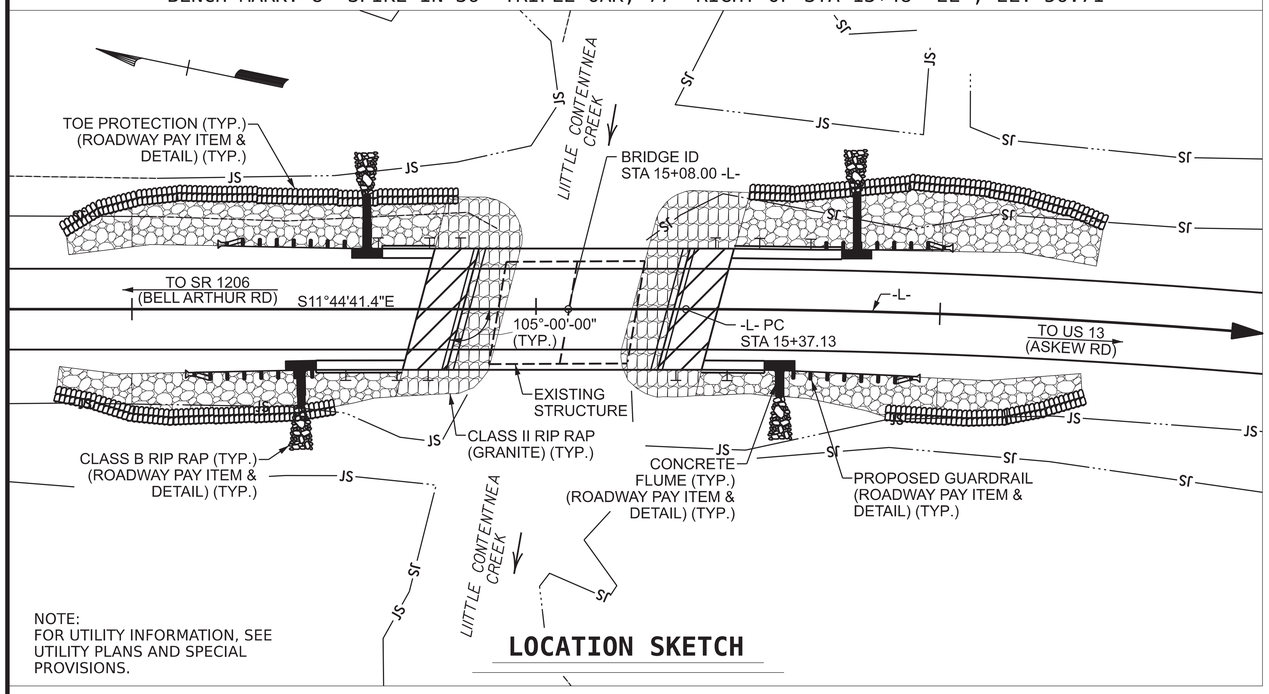

NOTE:
FOR UTILITY INFORMATION, SEE UTILITY PLANS AND SPECIAL PROVISIONS.

LOCATION SKETCH

HYDRAULIC DATA

DESIGN DISCHARGE	= 970 CFS
FREQUENCY OF DESIGN FLOOD	= 25 YRS
DESIGN HIGH WATER ELEVATION	= 53.64
DRAINAGE AREA	= 7.81 SQ. MI.
BASE DISCHARGE (Q100)	= 1,500 CFS
BASE HIGH WATER ELEVATION	= 55.00

OVERTOPPING FLOOD DATA

OVERTOPPING DISCHARGE	= 1,200 CFS
FREQUENCY OF OVERTOPPING FLOOD	= 50 YRS
OVERTOPPING FLOOD ELEVATION	= 54.59

OVERTOPPING STA. 17+50 -L-
WS EL. TAKEN @ RIVER STATION 8418.18

TOTAL BILL OF MATERIALS

	CONSTRUCTION, MAINTENANCE & REMOVAL OF TEMPORARY ACCESS @ STA 15+08.00 -L-	REMOVAL OF EXISTING STRUCTURE @ STA 15+08.00 -L-	UNCLASSIFIED STRUCTURE EXCAVATION	CLASS A CONCRETE	BRIDGE APPROACH SLABS	REINFORCING STEEL	PILE DRIVING EQUIPMENT SETUP FOR HP12X53 STEEL
	LUMP SUM	LUMP SUM	LUMP SUM	CU. YDS.	LUMP SUM	LBS.	EACH
SUPERSTRUCTURE					LUMP SUM		
END BENT 1			LUMP SUM	13.4		2,027	5
END BENT 2			LUMP SUM	13.4		2,027	5
TOTAL	LUMP SUM	LUMP SUM	LUMP SUM	26.8	LUMP SUM	4,054	10

TOTAL BILL OF MATERIALS (CONT.)

	DYNAMIC PILE TESTING	HP 12X53 STEEL PILES		VERTICAL CONCRETE BARRIER RAIL	RIP RAP CLASS II (2'-0" THICK) (GRANITE)	GEOTEXTILE FOR DRAINAGE	ELASTOMERIC BEARINGS	3'-0" X 1'-9" PRESTRESSED CONCRETE CORED SLAB UNIT	
	EACH	NO.	LIN. FT.	LIN. FT.	TONS	SQ. YDS.	LUMP SUM	NO.	LIN. FT.
SUPERSTRUCTURE				100.25			LUMP SUM	10	500
END BENT 1	1	5	425		15	74			
END BENT 2	1	5	425		15	80			
TOTAL	2	10	850	100.25	30	154	LUMP SUM	10	500

GENERAL NOTES

ASSUMED LIVE LOAD = HL 93 OR ALTERNATE LOADING.

THIS BRIDGE HAS BEEN DESIGNED IN ACCORDANCE WITH THE AASHTO LRFD BRIDGE DESIGN SPECIFICATIONS.

THE BRIDGE IS LOCATED IN SEISMIC ZONE 1.

FOR OTHER DESIGN AND GENERAL NOTES, SEE SHEET SN.

FOR EROSION CONTROL MEASURES, SEE EROSION CONTROL PLANS.

THE EXISTING STRUCTURE CONSISTING OF A TWO SPAN CONCRETE DECK ON TIMBER JOISTS WITH A CLEAR WIDTH OF 24'-0" AND SUPPORTED BY TIMBER CAPS AND PILES WITH TIMBER BULKHEADS AND LOCATED AT THE PROPOSED STRUCTURE SHALL BE REMOVED.

REMOVAL OF THE EXISTING BRIDGE SHALL BE PERFORMED IN A MANNER THAT PREVENTS DEBRIS FROM FALLING INTO THE WATER. THE CONTRACTOR SHALL SUBMIT DEMOLITION PLANS FOR REVIEW AND REMOVE THE BRIDGE IN ACCORDANCE WITH ARTICLE 402-2 OF THE STANDARD SPECIFICATIONS.

THE MATERIAL SHOWN IN THE CROSS-HATCHED AREA (ON SHEET 1 OF 2) SHALL BE EXCAVATED FOR A DISTANCE OF 23 FT LEFT AND 30 FT RIGHT AT END BENT 1 AND 30 FT EACH SIDE OF CENTERLINE OF ROADWAY AT END BENT 2 AS DIRECTED BY THE ENGINEER. THIS WORK WILL BE PAID FOR AT THE CONTRACT LUMP SUM PRICE FOR UNCLASSIFIED STRUCTURE EXCAVATION. SEE SECTION 412 OF THE STANDARD SPECIFICATIONS.

THE SUBSTRUCTURE OF THE EXISTING BRIDGE INDICATED ON THE PLANS IS FROM THE BEST INFORMATION AVAILABLE. SINCE THIS INFORMATION IS SHOWN FOR THE CONVENIENCE OF THE CONTRACTOR, THE CONTRACTOR SHALL HAVE NO CLAIM WHATSOEVER AGAINST THE DEPARTMENT OF TRANSPORTATION FOR ANY DELAYS OR ADDITIONAL COST INCURRED BASED ON DIFFERENCES BETWEEN THE EXISTING BRIDGE SUBSTRUCTURE SHOWN ON THE PLANS AND THE ACTUAL CONDITIONS AT THE PROJECT SITE.

FOR ASBESTOS ASSESSMENT FOR BRIDGE DEMOLITION AND RENOVATION ACTIVITIES, SEE SPECIAL PROVISIONS.

THIS STRUCTURE HAS BEEN DESIGNED IN ACCORDANCE WITH THE "HEC 18 - EVALUATING SCOUR AT BRIDGES."

FOR SUBMITTAL OF WORKING DRAWINGS, SEE SPECIAL PROVISIONS.

FOR FALSEWORK AND FORMWORK, SEE SPECIAL PROVISIONS.

FOR CRANE SAFETY, SEE SPECIAL PROVISIONS.

FOR GROUT FOR STRUCTURES, SEE SPECIAL PROVISIONS.

ASPHALT WEARING SURFACE IS INCLUDED IN ROADWAY QUANTITY ON ROADWAY PLANS.

PAVEMENT ALONG THE TRANSVERSE CENTERLINE OF ALL CAPS SHALL BE SAW CUT TO A DEPTH OF ¾±, CLEANED, AND FILLED WITH AN APPROVED ASPHALT SEALANT IN ACCORDANCE WITH SECTION 1028 OF THE STANDARD SPECIFICATIONS. PAYMENT FOR THIS WORK SHALL BE INCIDENTAL TO THE CONTRACT UNIT PRICE FOR VARIOUS CONTRACT ITEMS.

APPLY AN APPROVED EPOXY PROTECTIVE COATING TO THE TOPS OF ALL CAPS AND TO ALL THE EXTERIOR FACES OF ALL EXTERIOR CORE SLAB UNITS. PAYMENT FOR THIS WORK SHALL BE INCIDENTAL TO OTHER PAY ITEMS IN CONTRACT AND NO SEPARATE PAYMENT WILL BE MADE FOR THIS WORK.

USE A FLEXIBLE AND MOISTURE INSENSITIVE EPOXY COATING IN ACCORDANCE WITH SECTION 1080-10 OF THE STANDARD SPECIFICATIONS. PROVIDE A TYPE 3 MATERIAL CERTIFICATION IN ACCORDANCE WITH ARTICLE 106-3 SHOWING THAT THE PROPOSED EPOXY MEETS SECTION 1080-10 REQUIREMENTS.

FOUNDATION NOTES

FOR PILES, SEE SECTION 450 OF THE STANDARD SPECIFICATIONS.

PILES AT END BENT NO. 1 ARE DESIGNED FOR A FACTORED RESISTANCE OF 170 KIPS PER PILE.

DRIVE PILES AT END BENT NO. 1 TO A REQUIRED DRIVING RESISTANCE OF 245 KIPS PER PILE.

PILES AT END BENT NO. 2 ARE DESIGNED FOR A FACTORED RESISTANCE OF 170 KIPS PER PILE.

DRIVE PILES AT END BENT NO. 2 TO A REQUIRED DRIVING RESISTANCE OF 245 KIPS PER PILE.

IT HAS BEEN ESTIMATED THAT A HAMMER WITH AN EQUIVALENT RATED ENERGY IN THE RANGE OF 31,000 - 60,000 FT-LBS PER BLOW WILL BE REQUIRED TO DRIVE PILES. THIS ESTIMATED ENERGY RELEASE THE CONTRACTOR FROM PROVIDING DRIVING EQUIPMENT IN ACCORDANCE WITH 450-3(D)(2) OF THE STANDARD SPECIFICATIONS.

PROJECT NO. BP2.R034.1
PITT COUNTY
STATION: 15+08.00 -L-

SHEET 2 OF 2

NORTH CAROLINA PROFESSIONAL SEAL 036583 ENGINEER WESLEY D. HEVENER
5/28/2025
Signed by: Wes Hevener
7638A4B8874245S...

DOCUMENT NOT CONSIDERED FINAL UNLESS ALL SIGNATURES COMPLETED

AMT
A. MORTON THOMAS AND ASSOCIATES, INC.
900 RIDGEFIELD DRIVE, SUITE 325 • RALEIGH, NC 27609
(919) 855-9989 • NC LICENSE NO. F-1049
WWW.AMTENGINEERING.COM

STATE OF NORTH CAROLINA
DEPARTMENT OF TRANSPORTATION
RALEIGH

GENERAL DRAWING

FOR BRIDGE ON SR 1138
OVER LITTLE CONTENTNEA CREEK
BETWEEN SR 1206 AND SR 1217

REVISIONS						SHEET NO.
NO.	BY:	DATE:	NO.	BY:	DATE:	S1-3
1			3			TOTAL SHEETS
2			4			15

DRAWN BY : GAR DATE : 5/25
CHECKED BY : WDH DATE : 5/25
DESIGN ENGINEER OF RECORD: WDH DATE : 5/25

5/28/2025
c:\users\gramboull\documents\pw-amt-02\dms39708\401_005_BP2R034_SMU_GD_S1-3.dgn
gramboull

LOAD AND RESISTANCE FACTOR RATING (LRFR) SUMMARY FOR PRESTRESSED CONCRETE GIRDERS

LOAD TYPE		VEHICLE	WEIGHT (W) (TONS)	CONTROLLING LOAD RATING (#)	MINIMUM RATING FACTORS (RF)	TONS = W x RF	STRENGTH I LIMIT STATE											SERVICE III LIMIT STATE						COMMENT NUMBER
							LIVE-LOAD FACTORS (γ LL)	MOMENT					SHEAR					LIVE-LOAD FACTORS (γ LL)	MOMENT					
								DISTRIBUTION FACTORS (DF)	RATING FACTOR	SPAN	GIRDER LOCATION	DISTANCE FROM LEFT END OF SPAN (ft)	DISTRIBUTION FACTORS (DF)	RATING FACTOR	SPAN	GIRDER LOCATION	DISTANCE FROM LEFT END OF SPAN (ft)		DISTRIBUTION FACTORS (DF)	RATING FACTOR	SPAN	GIRDER LOCATION	DISTANCE FROM LEFT END OF SPAN (ft)	
DESIGN LOAD		HL-93 (INVENTORY)	N/A	1	1.205	--	1.75	0.271	1.59	50'	EL	24.482	0.616	1.20	50'	EL	4.896	0.80	0.271	1.46	50'	EL	24.482	
		HL-93 (OPERATING)	N/A		1.562	--	1.35	0.271	2.06	50'	EL	24.482	0.616	1.56	50'	EL	4.896	N/A	--	--	--	--	--	
		HS-20 (INVENTORY)	36.000	2	1.434	51.614	1.75	0.271	1.97	50'	EL	24.482	0.616	1.43	50'	EL	4.896	0.80	0.271	1.81	50'	EL	24.482	
		HS-20 (OPERATING)	36.000		1.859	66.906	1.35	0.271	2.56	50'	EL	24.482	0.616	1.86	50'	EL	4.896	N/A	--	--	--	--	--	
LEGAL LOAD	SINGLE VEHICLE (SV)	SNSH	13.500		3.678	49.655	1.4	0.271	5.02	50'	EL	24.482	0.616	4.00	50'	EL	4.896	0.80	0.271	3.68	50'	EL	24.482	
		SNGARBS2	20.000		2.905	58.101	1.4	0.271	3.97	50'	EL	24.482	0.616	2.93	50'	EL	4.896	0.80	0.271	2.91	50'	EL	24.482	
		SNAGRIS2	22.000		2.748	60.456	1.4	0.271	3.83	50'	EL	19.586	0.616	2.75	50'	EL	4.896	0.80	0.271	2.81	50'	EL	24.482	
		SNCOTTS3	27.250		1.835	49.998	1.4	0.271	2.50	50'	EL	24.482	0.616	2.01	50'	EL	4.896	0.80	0.271	1.83	50'	EL	24.482	
		SNAGGRS4	34.925		1.595	55.714	1.4	0.271	2.18	50'	EL	24.482	0.616	1.72	50'	EL	4.896	0.80	0.271	1.60	50'	EL	24.482	
		SNS5A	35.550		1.556	55.303	1.4	0.271	2.12	50'	EL	24.482	0.616	1.77	50'	EL	4.896	0.80	0.271	1.56	50'	EL	24.482	
		SNS6A	39.950		1.455	58.112	1.4	0.271	1.99	50'	EL	24.482	0.616	1.64	50'	EL	4.896	0.80	0.271	1.45	50'	EL	24.482	
		SNS7B	42.000		1.386	58.224	1.4	0.271	1.89	50'	EL	24.482	0.616	1.65	50'	EL	4.896	0.80	0.271	1.39	50'	EL	24.482	
	TRUCK TRACTOR SEMI-TRAILER (TTST)	TNAGRIT3	33.000		1.782	58.809	1.4	0.271	2.43	50'	EL	24.482	0.616	1.94	50'	EL	4.896	0.80	0.271	1.78	50'	EL	24.482	
		TNT4A	33.075		1.798	59.458	1.4	0.271	2.45	50'	EL	24.482	0.616	1.86	50'	EL	4.896	0.80	0.271	1.80	50'	EL	24.482	
		TNT6A	41.600		1.497	62.293	1.4	0.271	2.04	50'	EL	24.482	0.616	1.80	50'	EL	4.896	0.80	0.271	1.50	50'	EL	24.482	
		TNT7A	42.000		1.520	63.842	1.4	0.271	2.08	50'	EL	24.482	0.616	1.67	50'	EL	4.896	0.80	0.271	1.52	50'	EL	24.482	
		TNT7B	42.000		1.585	66.559	1.4	0.271	2.16	50'	EL	24.482	0.616	1.59	50'	EL	4.896	0.80	0.271	1.58	50'	EL	24.482	
		TNAGRIT4	43.000		1.504	64.667	1.4	0.271	2.05	50'	EL	24.482	0.616	1.53	50'	EL	4.896	0.80	0.271	1.50	50'	EL	24.482	
		TNAGT5A	45.000		1.405	63.217	1.4	0.271	1.92	50'	EL	24.482	0.616	1.56	50'	EL	4.896	0.80	0.271	1.40	50'	EL	24.482	
		TNAGT5B	45.000	3	1.376	61.936	1.4	0.271	1.88	50'	EL	24.482	0.616	1.45	50'	EL	4.896	0.80	0.271	1.38	50'	EL	24.482	
EMERGENCY VEHICLE (EV)		EV2	28.750		2.180	62.675	1.3	0.271	3.02	50'	EL	24.482	0.616	2.21	50'	EL	4.896	0.80	0.271	2.18	50'	EL	24.482	
		EV3	43.000	4	1.409	60.571	1.3	0.271	1.95	50'	EL	24.482	0.616	1.49	50'	EL	4.896	0.80	0.271	1.41	50'	EL	24.482	

LOAD FACTORS:

DESIGN LOAD RATING FACTORS	LIMIT STATE	γ DC	γ DW
	STRENGTH I	1.25	1.50
	SERVICE III	1.00	1.00

NOTES:

MINIMUM RATING FACTORS ARE BASED ON THE STRENGTH I AND SERVICE III LIMIT STATES.

ALLOWABLE STRESSES FOR SERVICE III LIMIT STATE ARE AS REQUIRED FOR DESIGN.

COMMENTS:

1.

2.

3.

4.

CONTROLLING LOAD RATING
1 DESIGN LOAD RATING (HL-93)
2 DESIGN LOAD RATING (HS-20)
3 LEGAL LOAD RATING **
4 EMERGENCY VEHICLE LOAD RATING **
** SEE CHART FOR VEHICLE TYPE

GIRDER LOCATION
I - INTERIOR GIRDER
EL - EXTERIOR LEFT GIRDER
ER - EXTERIOR RIGHT GIRDER

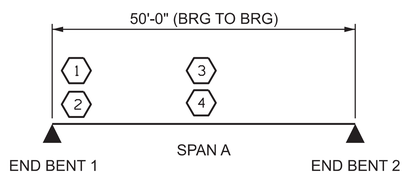

LRFR SUMMARY

PROJECT NO. BP2.R034.1

PITT COUNTY

STATION: 15+08.00 -L-

NORTH CAROLINA PROFESSIONAL SEAL 036583 ENGINEER WESLEY D. HEVENER

5/22/2025

DOCUMENT NOT CONSIDERED FINAL UNLESS ALL SIGNATURES COMPLETED

AMT A. MORTON THOMAS AND ASSOCIATES, INC.
900 RIDGEFIELD DRIVE, SUITE 325 • RALEIGH, NC 27609
(919) 855-9989 • NC LICENSE NO. F-1049
WWW.AMTENGINEERING.COM

STATE OF NORTH CAROLINA
DEPARTMENT OF TRANSPORTATION
RALEIGH

STANDARD

LRFR SUMMARY FOR 50' CORED SLAB UNIT 105° SKEW

(NON-INTERSTATE TRAFFIC)

REVISIONS						SHEET NO.
NO.	BY:	DATE:	NO.	BY:	DATE:	S1-4
1			3			TOTAL SHEETS
2			4			15

ASSEMBLED BY : GAR		DATE :	5/25
CHECKED BY : WDH		DATE :	5/25
DESIGN ENGINEER OF RECORD: WDH		DATE :	5/25
DRAWN BY : MAA 1/08	REV. 11/12/08	RR	MAA/GM
CHECKED BY : GM/DI 2/08	REV. 10/1/11		MAA/GM
	REV. 04/23		BNB/AAI

5/11/2025
c:\users\hbolinsky\documents\pw-amt-02\dms39708\401.007_BP2R034_SMU_LRFR_S1-4.dgn
hbolinsky

STD. NO. 21LRFR1_75&105S_50L

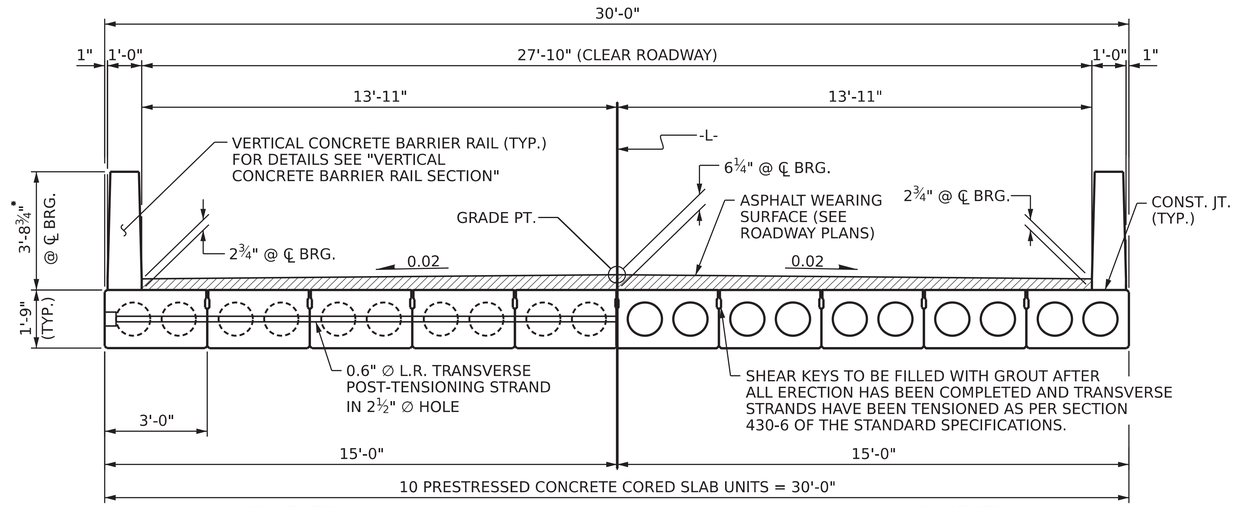

HALF SECTION
AT INTERMEDIATE DIAPHRAGMS

HALF SECTION
THROUGH VOIDS

TYPICAL SECTION

* - THE MAXIMUM BARRIER RAIL HEIGHT AND ASPHALT THICKNESS IS SHOWN. THE HEIGHT OF THE BARRIER RAIL AND ASPHALT THICKNESS VARIES WHILE THE TOP OF THE BARRIER RAIL FOLLOWS THE PROFILE OF THE GUTTERLINE. FOR RAIL HEIGHT DETAILS AND ASPHALT THICKNESS SEE THE ``VERTICAL CONCRETE BARRIER RAIL SECTION'' DETAIL.

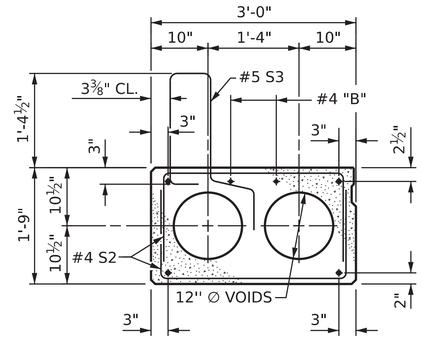

EXT. SLAB SECTION

(FOR PRESTRESSED STRAND LAYOUT, SEE INTERIOR SLAB SECTION.)

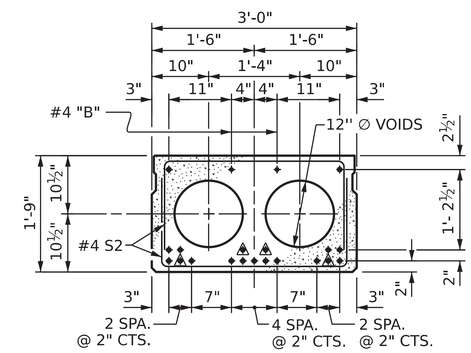

INTERIOR SLAB SECTION
(19 STRANDS REQUIRED)

0.6'' ∅ LOW RELAXATION STRAND LAYOUT

BOND SHALL BE BROKEN ON THESE STRANDS FOR A DISTANCE OF 6'-0" FROM END OF CORED SLAB UNIT. SEE STANDARD SPECIFICATIONS, ARTICLE 1078-7.

DEBONDING LEGEND

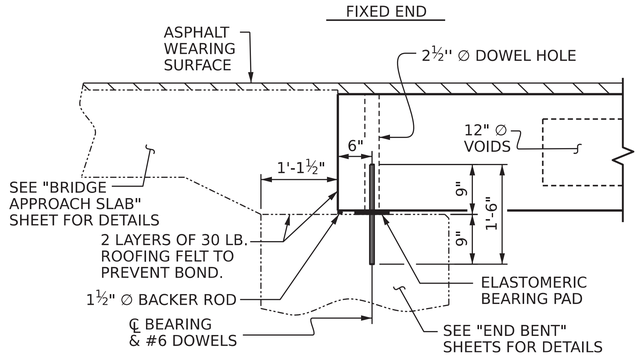

SECTION AT END BENT

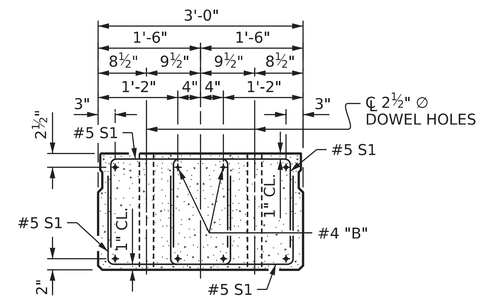

END ELEVATION

SHOWING PLACEMENT OF DOUBLE STIRRUPS AND LOCATION OF DOWEL HOLES. (STRAND LAYOUT NOT SHOWN.) INTERIOR SLAB UNIT SHOWN-EXTERIOR SLAB UNIT SIMILAR EXCEPT SHEAR KEY LOCATION.

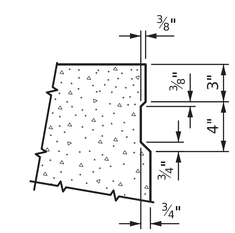

SHEAR KEY DETAIL

NOTE: OMIT SHEAR KEY ON OUTSIDE FACE OF EXTERIOR CORED SLABS.

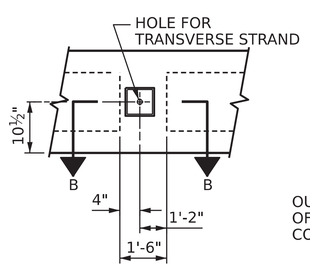

ELEVATION VIEW

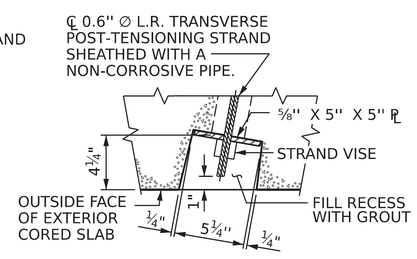

SECTION B-B

GROUTED RECESS AT END OF POST-TENSIONED STRAND OF CORED SLABS

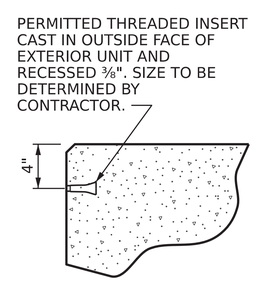

THREADED INSERT DETAIL

PROJECT NO. BP2.R034.1

PITT COUNTY

STATION: 15+08.00 -L-

SHEET 1 OF 3

NORTH CAROLINA PROFESSIONAL SEAL 036583 ENGINEER WESLEY D. HEVENER

5/22/2025

DOCUMENT NOT CONSIDERED FINAL UNLESS ALL SIGNATURES COMPLETED

A. MORTON THOMAS AND ASSOCIATES, INC.
900 RIDGEFIELD DRIVE, SUITE 325 • RALEIGH, NC 27609
(919) 855-9989 • NC LICENSE NO. F-1049
WWW.AMTENGINEERING.COM

STATE OF NORTH CAROLINA
DEPARTMENT OF TRANSPORTATION
RALEIGH

STANDARD

3'-0" X 1'-9"
PRESTRESSED CONCRETE
CORED SLAB UNIT
105° SKEW

REVISIONS						SHEET NO.
NO.	BY:	DATE:	NO.	BY:	DATE:	S1-5
1			3			TOTAL SHEETS
2			4			15

ASSEMBLED BY :	GAR	DATE :	5/25
CHECKED BY :	WDH	DATE :	5/25
DESIGN ENGINEER OF RECORD:	WDH	DATE :	5/25
DRAWN BY : DGE 5/09	REV. 8/14	MAA/TMG	
CHECKED BY : BCH 6/09	REV. 5/23	BNB/AAI	

5/11/2025
c:\users\hbolinsky\documents\pw-amt-02\dms39708\401_009_BP2R034_SMU_PCS_S1-5.dgn
hbolinsky

STD. NO. 21" PCS2_30_105S

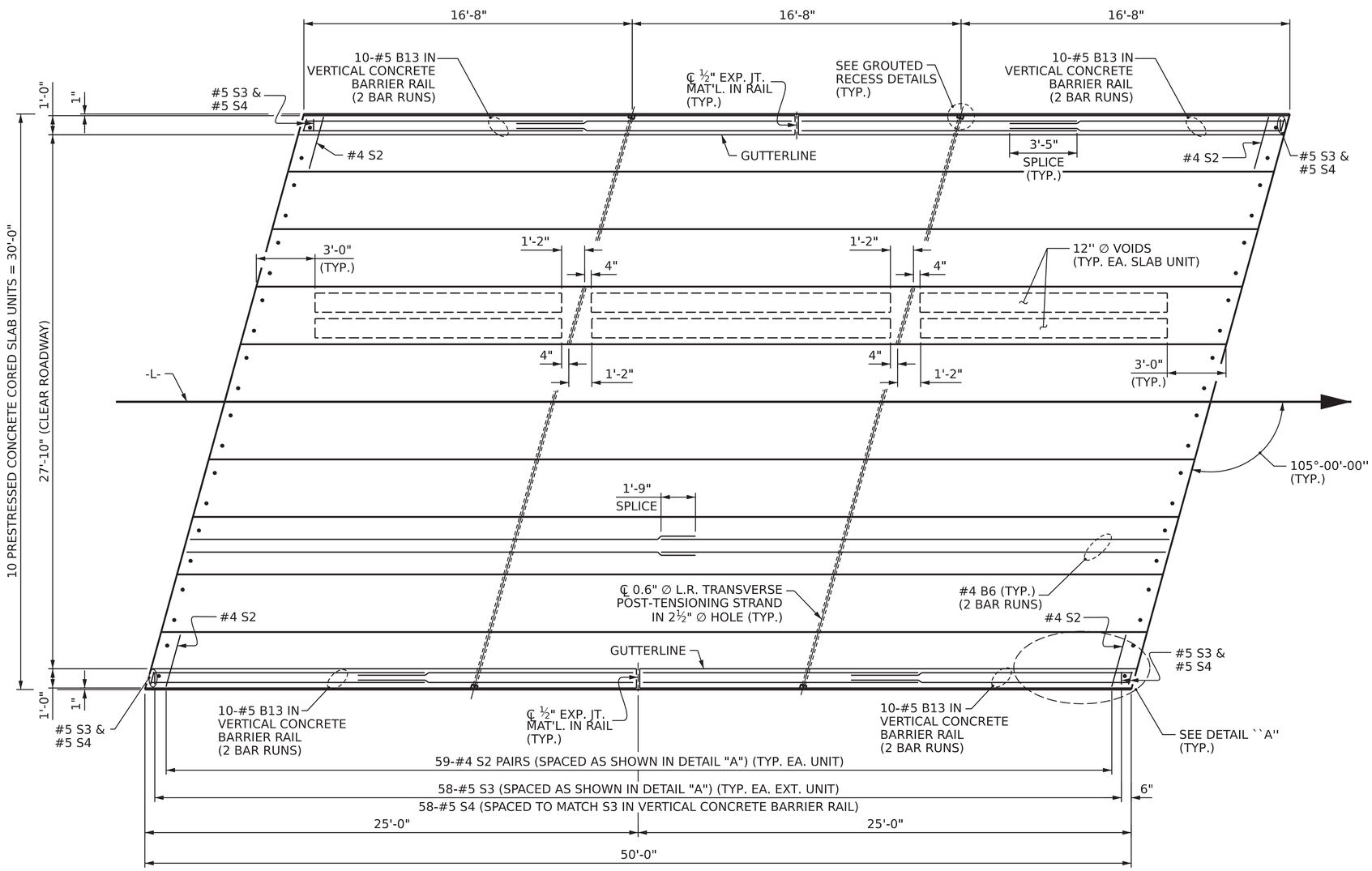

PLAN OF UNIT

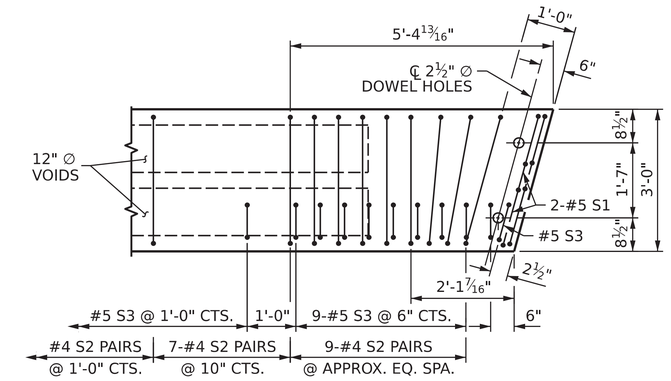

DETAIL "A"

(SIMILAR EACH END OF UNIT)
NOTE: EXTERIOR UNIT SHOWN - INTERIOR UNIT SIMILAE EXCEPT OMIT #5 S3 BARS.

PROJECT NO. BP2.R034.1

PITT COUNTY

STATION: 15+08.00 -L-

SHEET 2 OF 3

NORTH CAROLINA PROFESSIONAL SEAL 036583 ENGINEER WESLEY D. HEVENER
5/22/2025

DOCUMENT NOT CONSIDERED FINAL UNLESS ALL SIGNATURES COMPLETED

AMT
A. MORTON THOMAS AND ASSOCIATES, INC.
900 RIDGEFIELD DRIVE, SUITE 325 • RALEIGH, NC 27609
(919) 855-9989 • NC LICENSE NO. F-1049
WWW.AMTENGINEERING.COM

STATE OF NORTH CAROLINA
DEPARTMENT OF TRANSPORTATION
RALEIGH

STANDARD

PLAN OF 50' UNIT
27'-10" CLEAR ROADWAY
105° SKEW

REVISIONS						SHEET NO.
NO.	BY:	DATE:	NO.	BY:	DATE:	S1-6
1			3			TOTAL SHEETS
2			4			15

ASSEMBLED BY : GAR		DATE :	5/25
CHECKED BY : WDH		DATE :	5/25
DESIGN ENGINEER OF RECORD: WDH		DATE :	5/25
DRAWN BY : DGE	5/09	REV. 12/5/11	MAA/AAC
CHECKED BY : BCH	6/09	REV. 8/14	MAA/TMG

5/11/2025
c:\users\hbolinsky\documents\pw-amt-02\dms39708\401_011_BP2R034_SMU_PCS_S1-6.dgn
hbolinsky

STD. NO. 21" PCS2_30_105S_50L

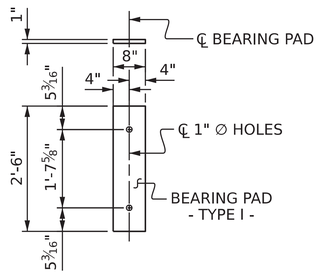

FIXED END
(TYPE I - 20 REQ' D)

ELASTOMERIC BEARING DETAILS

ELASTOMER IN ALL BEARINGS SHALL BE 50 DUROMETER HARDNESS.

BILL OF MATERIAL FOR VERTICAL CONCRETE BARRIER RAIL						
BAR	BARS PER PAIR OF EXTERIOR UNITS	TOTAL NO.	SIZE	TYPE	LENGTH	WEIGHT
	50' UNIT					
* B13	80	80	#5	STR	14'-2"	1182
* S4	120	120	#5	2	7'-2"	897
* EPOXY COATED REINFORCING STEEL				LBS.		2079
CLASS AA CONCRETE				CU.YDS.		12.8
TOTAL VERTICAL CONCRETE BARRIER RAIL				LN. FT.		100.25

DEAD LOAD DEFLECTION AND CAMBER	
	3'-0" x 1'-9"
50' CORED SLAB UNIT	0.6" ∅ L.R. STRAND
CAMBER (SLAB ALONE IN PLACE)	1½" ↑
DEFLECTION DUE TO SUPERIMPOSED DEAD LOAD **	⅜" ↓
FINAL CAMBER	1⅛" ↑

** INCLUDES FUTURE WEARING SURFACE

BAR TYPES

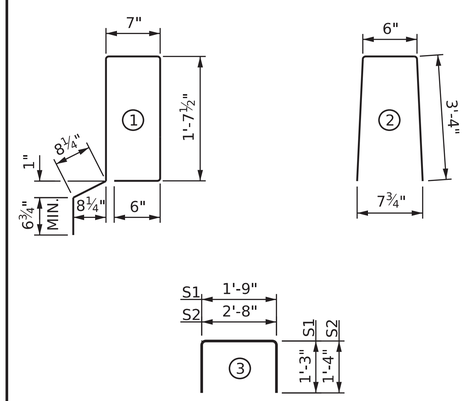

ALL BAR DIMENSIONS ARE OUT TO OUT

NOTES

ALL PRESTRESSING STRANDS SHALL BE 7-WIRE LOW RELAXATION GRADE 270 STRANDS AND SHALL CONFORM TO AASHTO M203 EXCEPT FOR SAMPLING REQUIREMENTS WHICH SHALL BE IN ACCORDANCE WITH THE STANDARD SPECIFICATIONS.

ALL REINFORCING STEEL CAST WITH THE CORED SLAB SECTIONS SHALL BE GRADE 60 AND SHALL BE INCLUDED IN THE UNIT PRICE BID FOR PRESTRESSED CONCRETE CORED SLABS.

RECESSES FOR TRANSVERSE STRANDS SHALL BE GROUTED AFTER THE TENSIONING OF THE STRANDS.

THE 2½" ∅ DOWEL HOLES AT FIXED ENDS OF SLAB SECTIONS SHALL BE FILLED WITH NON-SHRINK GROUT.

THE BACKER RODS SHALL CONFORM TO THE REQUIREMENTS OF TYPE M BOND BREAKER. SEE SECTION 1028 OF THE STANDARD SPECIFICATIONS.

WHEN CORED SLABS ARE CAST, AN INTERNAL HOLD-DOWN SYSTEM SHALL BE EMPLOYED TO PREVENT VOIDS FROM RISING OR MOVING SIDEWAYS. AT LEAST SIX WEEKS PRIOR TO CASTING CORED SLABS, THE CONTRACTOR SHALL SUBMIT TO THE ENGINEER FOR REVIEW AND COMMENT, DETAILED DRAWINGS OF THE PROPOSED HOLD-DOWN SYSTEM. IN ADDITION TO STRUCTURAL DETAILS, LOCATION AND SPACING OF THE HOLD-DOWNS SHALL BE INDICATED.

ALL REINFORCING STEEL IN THE VERTICAL CONCRETE BARRIER RAIL SHALL BE EPOXY COATED.

PRESTRESSING STRANDS SHALL BE CUT FLUSH WITH THE CORED SLAB UNIT ENDS.

APPLY EPOXY PROTECTIVE COATING TO CORED SLAB UNIT ENDS.

GROOVED CONTRACTION JOINTS, ½" IN DEPTH, SHALL BE TOOLED IN ALL EXPOSED FACES OF THE BARRIER RAIL AND IN ACCORDANCE WITH ARTICLE 825-10(B) OF THE STANDARD SPECIFICATIONS. A CONTRACTION JOINT SHALL BE LOCATED AT EACH THIRD POINT BETWEEN BARRIER RAIL EXPANSION JOINTS. ONLY ONE CONTRACTION JOINT IS REQUIRED AT MIDPOINT OF BARRIER RAIL SEGMENTS LESS THAN 20 FEET IN LENGTH AND NO CONTRACTION JOINTS ARE REQUIRED FOR THOSE SEGMENTS LESS THAN 10 FEET IN LENGTH.

FLAME CUTTING OF THE TRANSVERSE POST-TENSIONING STRAND IS NOT ALLOWED.

THE TRANSFER OF LOAD FROM THE ANCHORAGES TO THE CORED SLAB UNIT SHALL BE DONE WHEN THE CONCRETE HAS REACHED A COMPRESSIVE STRENGTH OF NOT LESS THAN THE REQUIRED STRENGTH SHOWN IN THE "CONCRETE RELEASE STRENGTH" TABLE.

FOR GROUT FOR STRUCTURES, SEE SPECIAL PROVISIONS.

THE PERMITTED THREADED INSERTS ARE DETAILED AS AN OPTION FOR THE CONTRACTOR TO ATTACH FALSEWORK AND FORMWORK DURING CONSTRUCTION.

THE PERMITTED THREADED INSERTS IN THE EXTERIOR UNITS SHALL BE SIZED BY THE CONTRACTOR, SPACED AT 4'-0" CENTERS AND GALVANIZED IN ACCORDANCE WITH SECTION 1076 OF THE STANDARD SPECIFICATIONS. STAINLESS STEEL THREADED INSERTS MAY BE USED AS AN ALTERNATE.

THE PERMITTED THREADED INSERTS SHALL BE GROUTED BY THE CONTRACTOR IMMEDIATELY FOLLOWING REMOVAL OF THE FALSEWORK.

THE COST OF THE PERMITTED THREADED INSERTS SHALL BE INCLUDED IN THE PRICE BID FOR THE PRECAST UNITS.

CORED SLABS REQUIRED			
	NUMBER	LENGTH	TOTAL LENGTH
50' UNIT			
EXTERIOR C.S.	2	50'-0"	100'-0"
INTERIOR C.S.	8	50'-0"	400'-0"
TOTAL	10		500'-0"

CONCRETE RELEASE STRENGTH	
UNIT	PSI
50' UNITS	4900

BILL OF MATERIAL FOR ONE 50' CORED SLAB UNIT							
				EXTERIOR UNIT		INTERIOR UNIT	
BAR	NUMBER	SIZE	TYPE	LENGTH	WEIGHT	LENGTH	WEIGHT
B6	4	#4	STR	25'-9"	69	25'-9"	69
S1	8	#5	3	4'-3"	35	4'-3"	35
S2	118	#4	3	5'-4"	420	5'-4"	420
* S3	60	#5	1	5'-7"	349		
REINFORCING STEEL			LBS.		524		524
* EPOXY COATED REINFORCING STEEL			LBS.		349		
6500 P.S.I. CONCRETE			CU. YDS.		7.3		7.3
0.6" ∅ L.R. STRANDS			No.		19		19

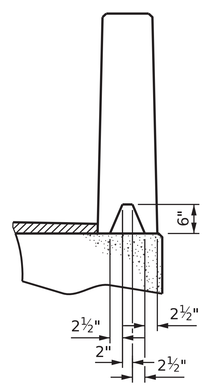

SECTION S-S

AT DAM IN OPEN JOINT
(THIS IS TO BE USED ONLY WHEN SLIP FORM IS USED)

GUTTERLINE ASPHALT THICKNESS & RAIL HEIGHT		
	ASPHALT OVERLAY THICKNESS	RAIL HEIGHT
	@ MID-SPAN	@ MID-SPAN
50' UNITS	1⅝"	3'-7⅝"

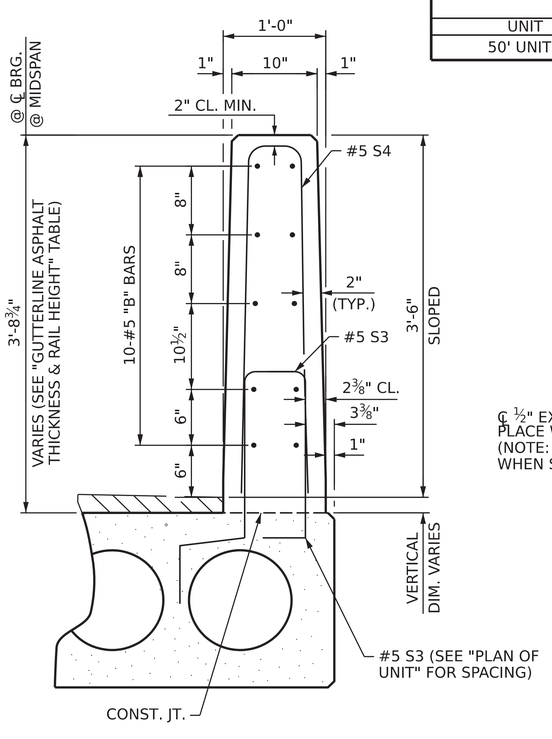

VERTICAL CONCRETE BARRIER RAIL SECTION

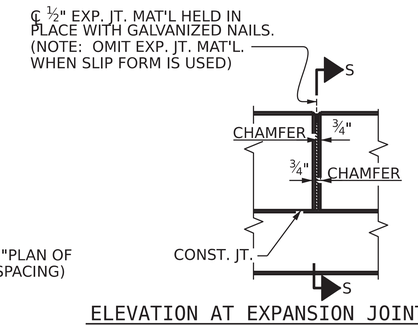

ELEVATION AT EXPANSION JOINTS

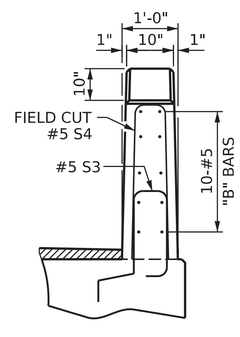

END VIEW

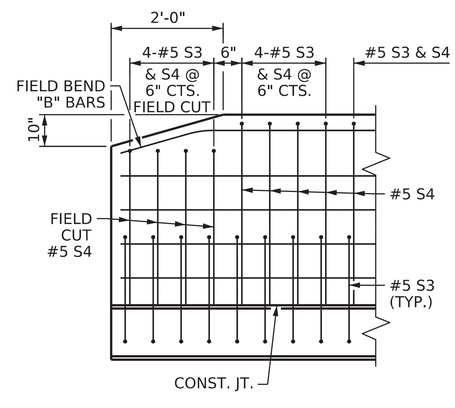

SIDE VIEW

END OF RAIL DETAILS

GRADE 270 STRANDS	
	0.6" ∅ L.R.
AREA (SQUARE INCHES)	0.217
ULTIMATE STRENGTH (LBS. PER STRAND)	58,600
APPLIED PRESTRESS (LBS. PER STRAND)	43,950

PROJECT NO. BP2.R034.1
PITT COUNTY
STATION: 15+08.00 -L-

SHEET 3 OF 3

NORTH CAROLINA PROFESSIONAL SEAL 036583 ENGINEER WESLEY D. HEVENER
5/22/2025

DOCUMENT NOT CONSIDERED FINAL UNLESS ALL SIGNATURES COMPLETED

AMT
A. MORTON THOMAS AND ASSOCIATES, INC.
900 RIDGEFIELD DRIVE, SUITE 325 • RALEIGH, NC 27609
(919) 855-9989 • NC LICENSE NO. F-1049
WWW.AMTENGINEERING.COM

STATE OF NORTH CAROLINA
DEPARTMENT OF TRANSPORTATION
RALEIGH

STANDARD

3'-0" X 1'-9"
PRESTRESSED CONCRETE
CORED SLAB UNIT
105° SKEW

REVISIONS							
NO.	BY:	DATE:	NO.	BY:	DATE:	SHEET NO.	
1			3			S1-7	
2			4			TOTAL SHEETS	
						15	

STD. NO. 21" PCS3_30_105S

ASSEMBLED BY : GAR		DATE :	5/25
CHECKED BY : WDH		DATE :	5/25
DESIGN ENGINEER OF RECORD: WDH		DATE :	5/25
DRAWN BY : DGE	5/09	REV. 12/5/11	MAA/AAC
CHECKED BY : BCH	6/09	REV. 8/14	MAA/TMG

5/11/2025
c:\users\hbolinsky\documents\pw-amt-02\dms39708\401_013_BP2R034_SMU_PCS_S1-7.dgn
hbolinsky

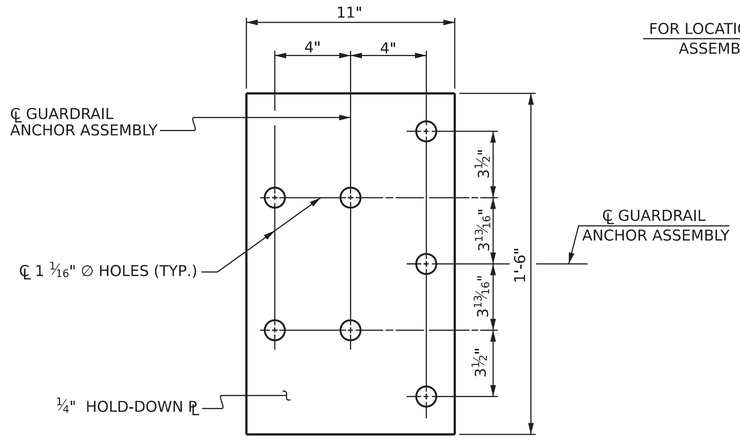

PLAN

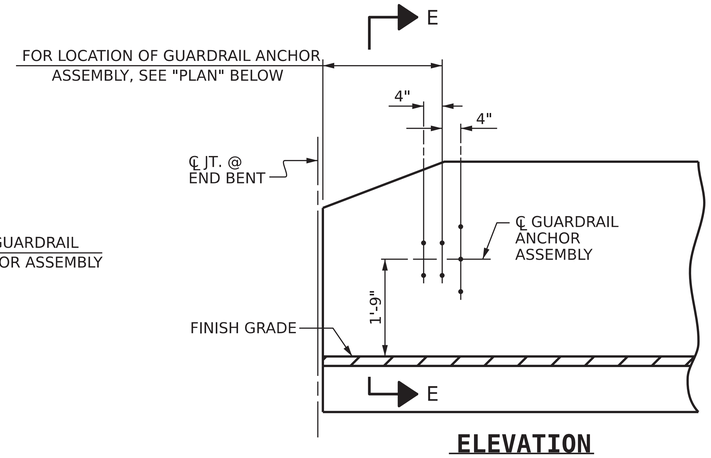

ELEVATION

NOTES

THE GUARDRAIL ANCHOR ASSEMBLY SHALL CONSIST OF A 1/4" HOLD DOWN PLATE AND 7 -7/8" ∅ BOLTS WITH NUTS AND WASHERS.

THE HOLD-DOWN PLATE SHALL CONFORM TO AASHTO M270 GRADE 36. AFTER FABRICATION, THE HOLD-DOWN PLATE SHALL BE HOT-DIP GALVANIZED IN ACCORDANCE WITH AASHTO M111.

BOLTS SHALL CONFORM TO THE REQUIREMENTS OF ASTM A307 AND NUTS SHALL CONFORM TO THE REQUIREMENTS OF AASHTO M291. BOLTS, NUTS AND WASHERS SHALL BE GALVANIZED. (AT THE CONTRACTOR'S OPTION, STAINLESS STEEL BOLTS, NUTS AND WASHERS MAY BE USED AS AN ALTERNATE FOR THE 7/8" ∅ GALVANIZED BOLTS, NUTS AND WASHERS. THEY SHALL CONFORM TO OR EXCEED THE MECHANICAL REQUIREMENTS OF ASTM A307. THE USE OF THIS ALTERNATE SHALL BE APPROVED BY THE ENGINEER.)

THE GUARDRAIL ANCHOR ASSEMBLY IS REQUIRED AT ALL POINTS WHERE APPROACH GUARDRAIL IS TO BE ATTACHED TO THE END OF BARRIER RAIL. FOR POINTS OF ATTACHMENT, SEE SKETCH.

AFTER INSTALLATION, THE EXPOSED THREAD OF THE BOLT SHALL BE BURRED WITH A SHARP POINTED TOOL.

THE COST OF THE GUARDRAIL ANCHOR ASSEMBLY SHALL BE INCLUDED IN THE UNIT CONTRACT PRICE BID FOR VERTICAL CONCRETE BARRIER RAIL.

THE VERTICAL REINFORCING BARS MAY BE SHIFTED SLIGHTLY IN THE VERTICAL CONCRETE BARRIER RAIL TO CLEAR ASSEMBLY BOLTS.

THE 1 1/4" ∅ HOLES SHALL BE FORMED OR DRILLED WITH A CORE BIT. IMPACT TOOLS WILL NOT BE PERMITTED. ANY CONCRETE DAMAGED BY THIS WORK SHALL BE REPAIRED TO THE SATISFACTION OF THE ENGINEER.

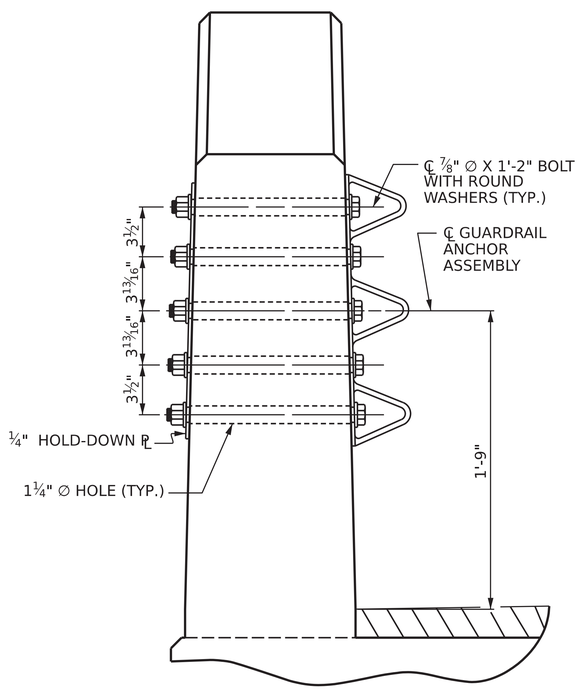

SECTION E-E

GUARDRAIL ANCHOR ASSEMBLY DETAILS

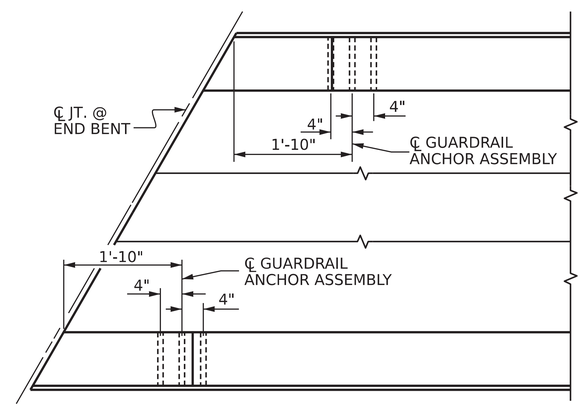

PLAN

LOCATION OF ANCHORS FOR GUARDRAIL

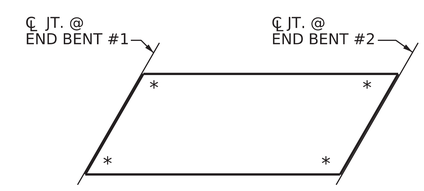

SKETCH SHOWING POINTS OF ATTACHMENT

* DENOTES GUARDRAIL ANCHOR ASSEMBLY

PROJECT NO. BP2.R034.1

PITT COUNTY

STATION: 15+08.00 -L-

ASSEMBLED BY : GAR		DATE :	5/25
CHECKED BY : WDH		DATE :	5/25
DESIGN ENGINEER OF RECORD: WDH		DATE :	5/25
DRAWN BY : MAA	5/10	REV. 1/15	MAA/TMG
CHECKED BY : GM	5/10	REV. 12/17	MAA/THC
		REV. 5/18	MAA/THC

5/11/2025
c:\users\hbolinsky\documents\pw-amt-02\dms39708\401_015_BP2R034_SMU_GRA_S1-8.dgn
hbolinsky

NORTH CAROLINA PROFESSIONAL SEAL 036583 ENGINEER WESLEY D. HEVENER
7638A4B2
5/22/2025

DOCUMENT NOT CONSIDERED FINAL UNLESS ALL SIGNATURES COMPLETED

AMT
A. MORTON THOMAS AND ASSOCIATES, INC.
900 RIDGEFIELD DRIVE, SUITE 325 • RALEIGH, NC 27609
(919) 855-9989 • NC LICENSE NO. F-1049
WWW.AMTENGINEERING.COM

STATE OF NORTH CAROLINA
DEPARTMENT OF TRANSPORTATION
RALEIGH

STANDARD

GUARDRAIL ANCHORAGE DETAILS FOR VERTICAL CONCRETE BARRIER RAIL

REVISIONS						SHEET NO.
NO.	BY:	DATE:	NO.	BY:	DATE:	S1-8
1			3			TOTAL SHEETS
2			4			15

STD. GRA3

NOTES

STIRRUPS IN CAP MAY BE SHIFTED AS NECESSARY TO CLEAR DOWELS.

THE CONCRETE IN THE SHADED AREA OF THE WING SHALL BE POURED AFTER THE VERTICAL CONCRETE BARRIER RAIL IS CAST IF SLIP FORMING IS USED.

FOR PILE SPLICE DETAILS, SEE SHEET 4 OF 4.

FOR WING DETAILS, SEE SHEET 3 OF 4.

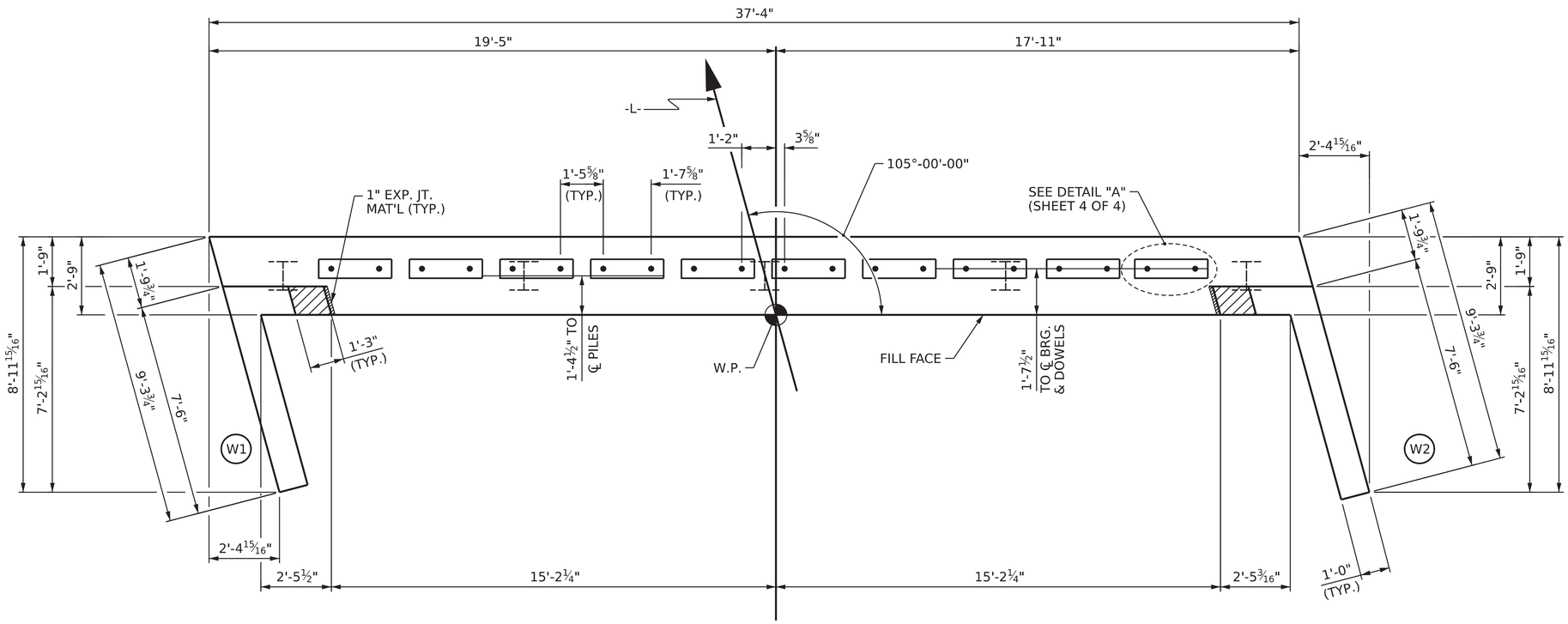

PLAN

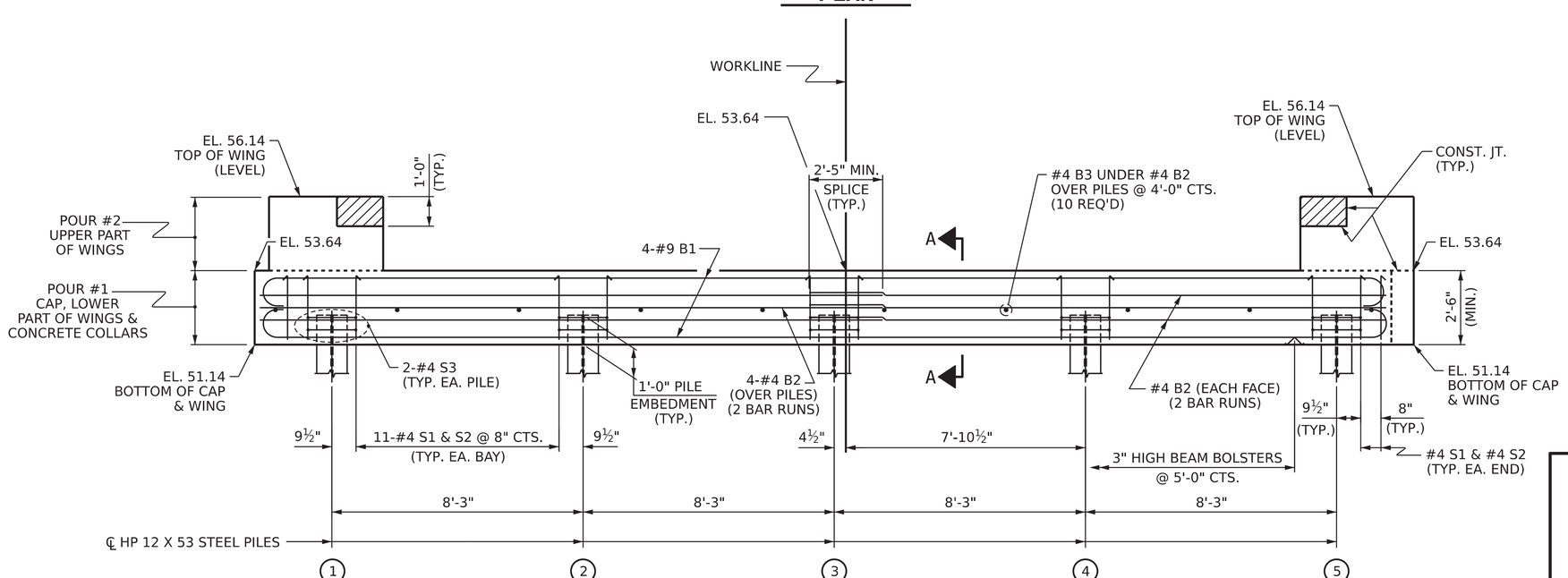

ELEVATION

WINGS NOT SHOWN FOR CLARITY.
FOR SECTION A-A, SEE SHEET 4 OF 4.
CONCRETE COLLARS FOR STEEL PILES NOT SHOWN IN PLAN AND ELEVATION VIEWS FOR CLARITY.
SEE ``CORROSION PROTECTION FOR STEEL PILES DETAIL'', SHEET 4 OF 4.

PROJECT NO. BP2.R034.1
PITT COUNTY
STATION: 15+08.00 -L-

SHEET 1 OF 4

NORTH CAROLINA PROFESSIONAL SEAL 036583 ENGINEER WESLEY D. HEVENER
5/22/2025

DOCUMENT NOT CONSIDERED FINAL UNLESS ALL SIGNATURES COMPLETED

A. MORTON THOMAS AND ASSOCIATES, INC.
900 RIDGEFIELD DRIVE, SUITE 325 • RALEIGH, NC 27609
(919) 855-9989 • NC LICENSE NO. F-1049
WWW.AMTENGINEERING.COM

STATE OF NORTH CAROLINA
DEPARTMENT OF TRANSPORTATION
RALEIGH

SUBSTRUCTURE

END BENT NO. 1

REVISIONS						SHEET NO.
NO.	BY:	DATE:	NO.	BY:	DATE:	S1-9
1			3			TOTAL SHEETS
2			4			15

ASSEMBLED BY : GAR		DATE :	5/25
CHECKED BY : WDH		DATE :	5/25
DESIGN ENGINEER OF RECORD: WDH		DATE :	5/25
DRAWN BY : DGE 01/10	REV. 4/15	MAA/TMG	
CHECKED BY : MKT 01/10			

5/11/2025
c:\users\hbolinsky\documents\pw-amt-02\dms39708\401_017_BP2R034_SMU_EB1_S1-9.dgn
hbolinsky

STD. NO. EB_30_105S

NOTES

STIRRUPS IN CAP MAY BE SHIFTED AS NECESSARY TO CLEAR DOWELS.

THE CONCRETE IN THE SHADED AREA OF THE WING SHALL BE POURED AFTER THE VERTICAL CONCRETE BARRIER RAIL IS CAST IF SLIP FORMING IS USED.

FOR PILE SPLICE DETAILS, SEE SHEET 4 OF 4.

FOR WING DETAILS, SEE SHEET 3 OF 4.

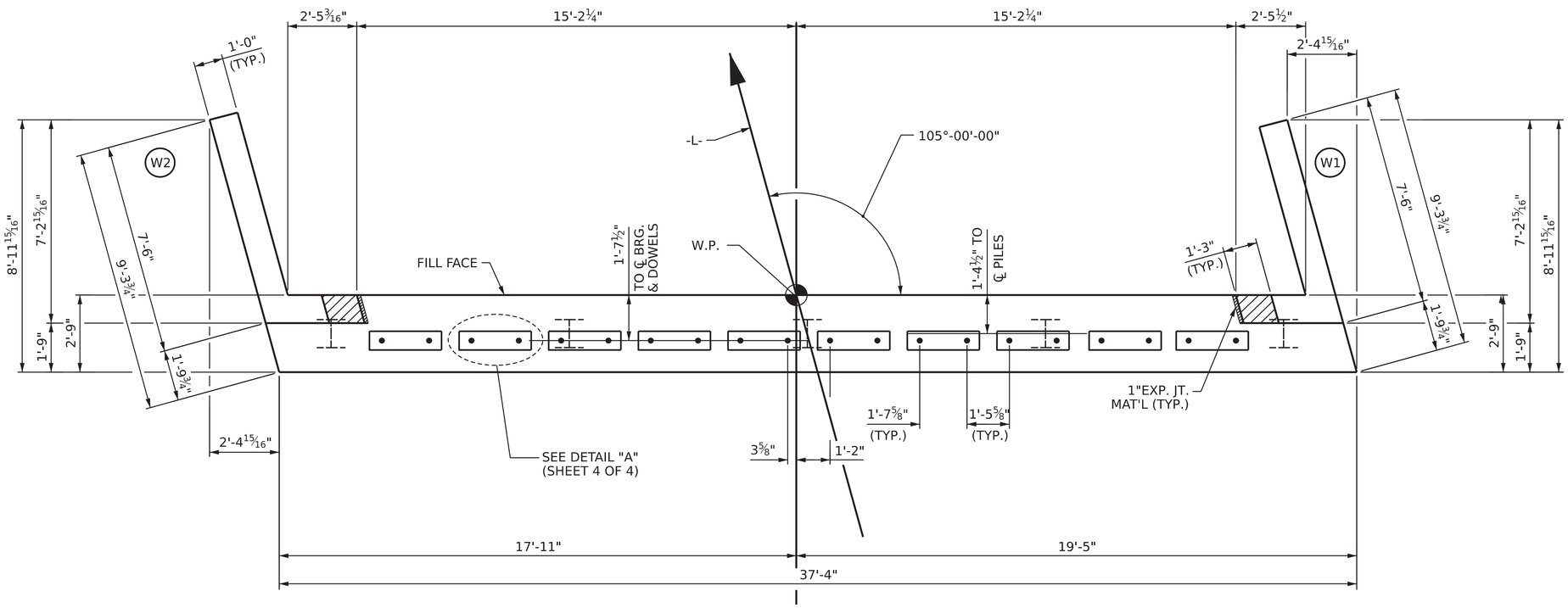

PLAN

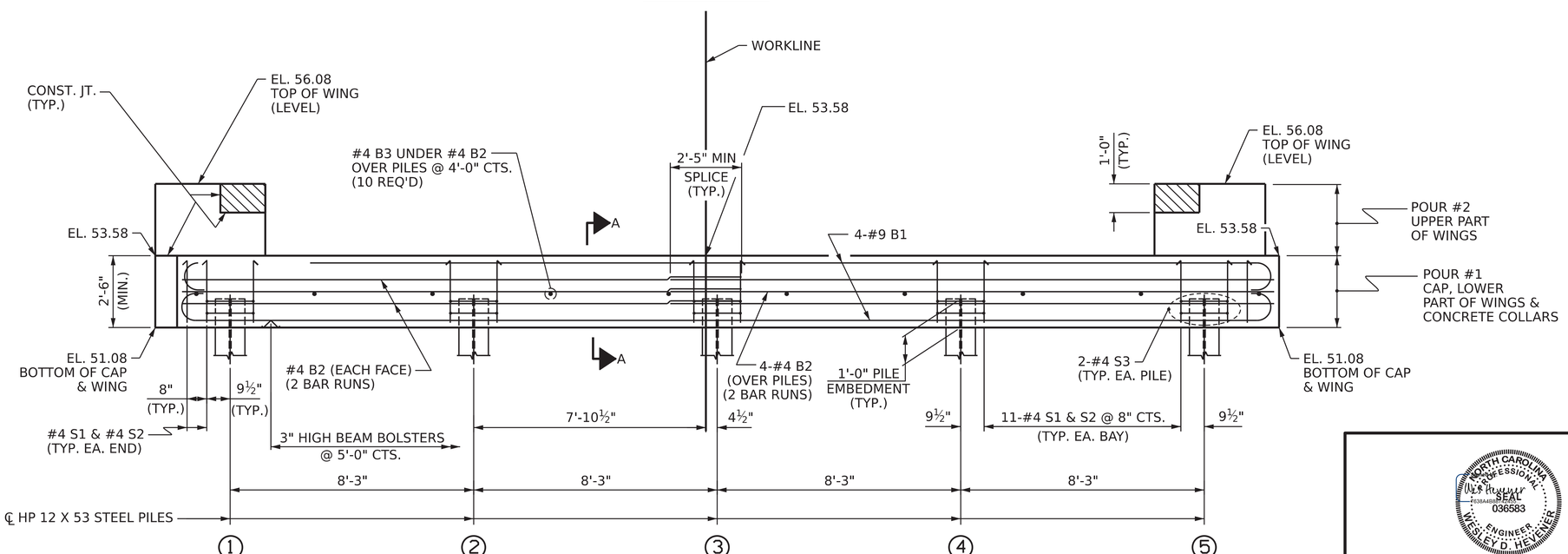

ELEVATION

WINGS NOT SHOWN FOR CLARITY.
FOR SECTION A-A, SEE SHEET 4 OF 4.
CONCRETE COLLARS FOR STEEL PILES NOT SHOWN IN PLAN AND ELEVATION VIEWS FOR CLARITY.
SEE "CORROSION PROTECTION FOR STEEL PILES DETAIL", SHEET 4 OF 4.

PROJECT NO. BP2.R034.1
PITT COUNTY
STATION: 15+08.00 -L-

SHEET 2 OF 4

NORTH CAROLINA PROFESSIONAL SEAL 036583 ENGINEER WESLEY D. HEVENER
5/22/2025

DOCUMENT NOT CONSIDERED FINAL UNLESS ALL SIGNATURES COMPLETED

AMT
A. MORTON THOMAS AND ASSOCIATES, INC.
900 RIDGEFIELD DRIVE, SUITE 325 • RALEIGH, NC 27609
(919) 855-9989 • NC LICENSE NO. F-1049
WWW.AMTENGINEERING.COM

STATE OF NORTH CAROLINA
DEPARTMENT OF TRANSPORTATION
RALEIGH

SUBSTRUCTURE

END BENT NO. 2

REVISIONS						SHEET NO.
NO.	BY:	DATE:	NO.	BY:	DATE:	S1-10
1			3			TOTAL SHEETS
2			4			15

ASSEMBLED BY : GAR		DATE :	5/25
CHECKED BY : WDH		DATE :	5/25
DESIGN ENGINEER OF RECORD: WDH		DATE :	5/25
DRAWN BY : DGE 01/10	REV. 04/15	MAA/TMG	
CHECKED BY : MKT 01/10			

5/11/2025
c:\users\hbolinsky\documents\pw-amt-02\dms39708\401_019_BP2R034_SMU_EB2_S1-10.dgn
hbolinsky

STD. NO. EB_30_105S

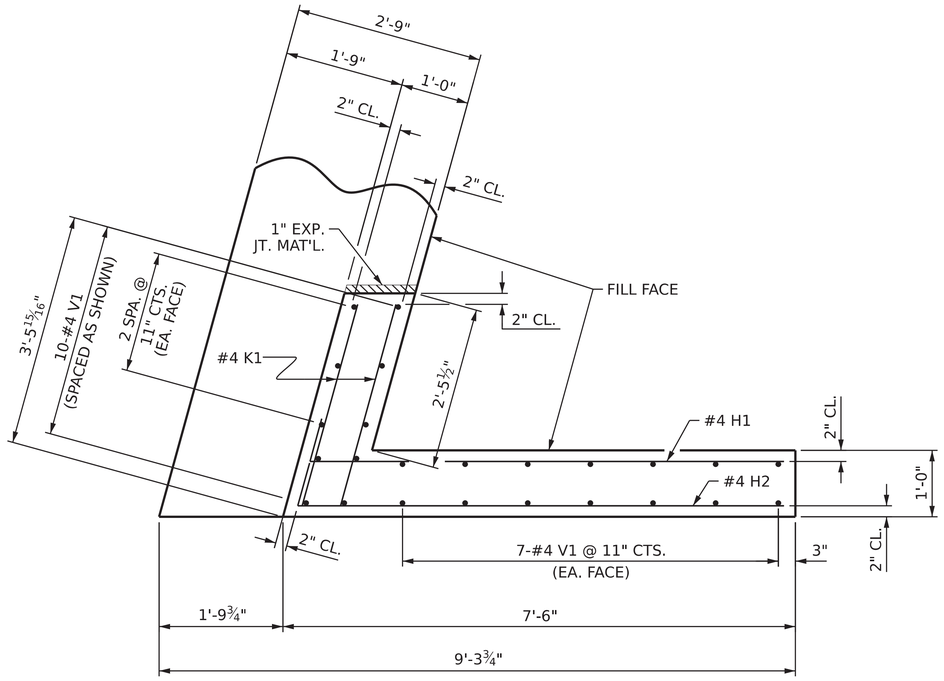

PLAN OF WING (W1)

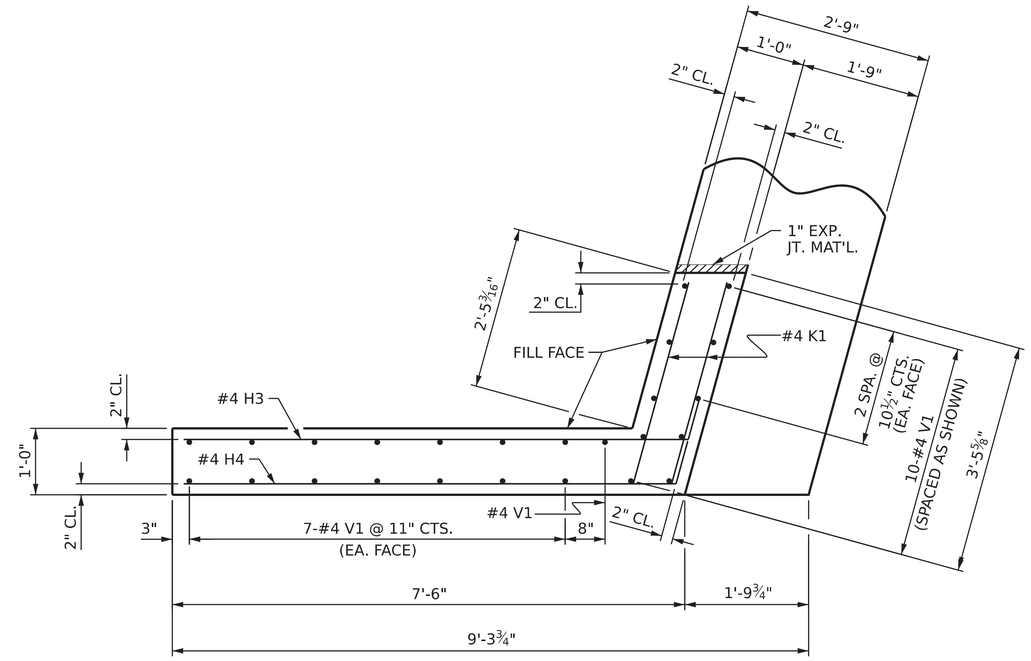

PLAN OF WING (W2)

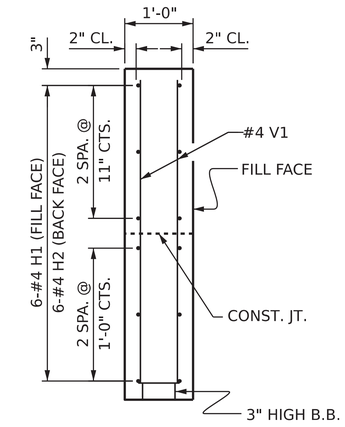

SECTION X-X

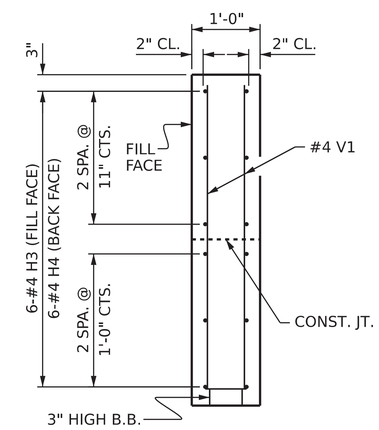

SECTION Y-Y

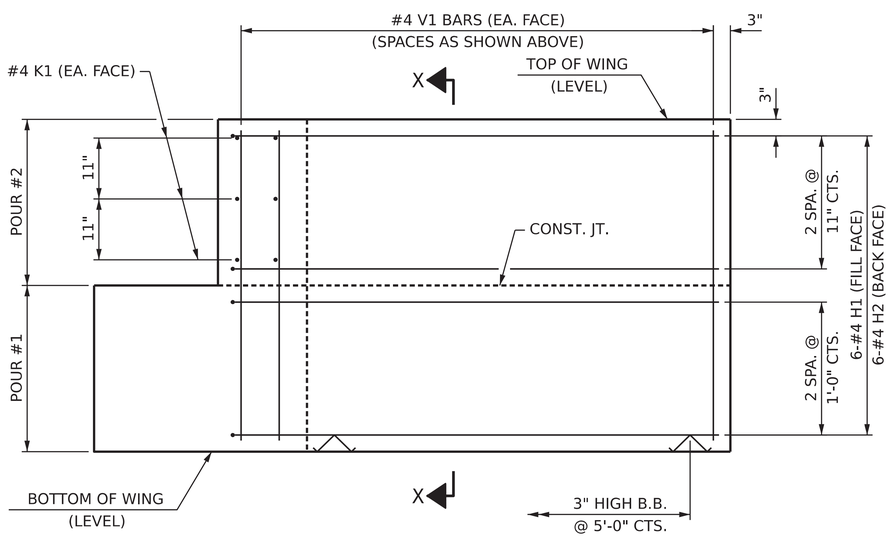

ELEVATION OF WING (W1)

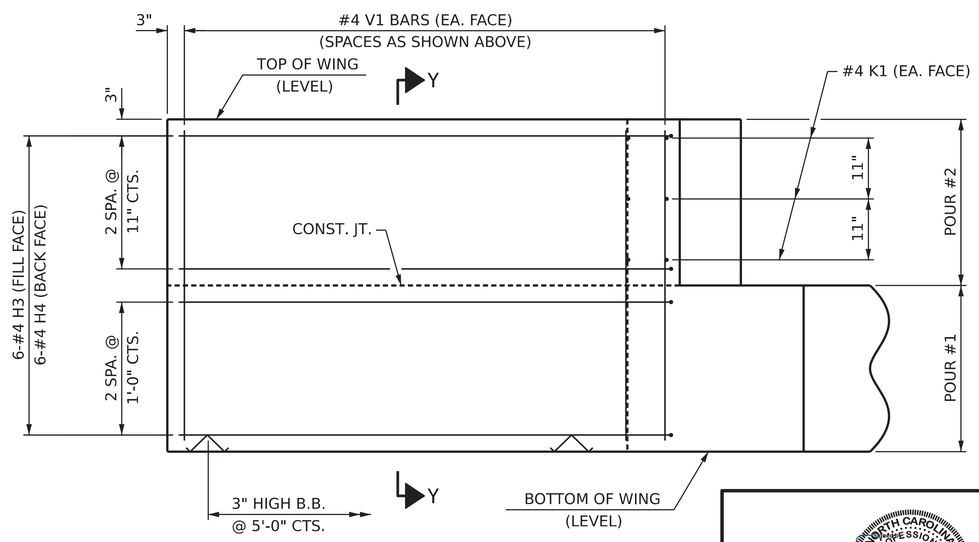

ELEVATION OF WING (W2)

WING DETAILS

PROJECT NO. BP2.R034.1

PITT COUNTY

STATION: 15+08.00 -L-

SHEET 3 OF 4

NORTH CAROLINA PROFESSIONAL SEAL 036583 ENGINEER WESLEY D. HEVEER

5/22/2025

DOCUMENT NOT CONSIDERED FINAL UNLESS ALL SIGNATURES COMPLETED

AMT A. MORTON THOMAS AND ASSOCIATES, INC.
900 RIDGEFIELD DRIVE, SUITE 325 • RALEIGH, NC 27609
(919) 855-9989 • NC LICENSE NO. F-1049
WWW.AMTENGINEERING.COM

STATE OF NORTH CAROLINA
DEPARTMENT OF TRANSPORTATION
RALEIGH

SUBSTRUCTURE

END BENT
WING DETAILS

REVISIONS						SHEET NO.
NO.	BY:	DATE:	NO.	BY:	DATE:	S1-11
1			3			TOTAL SHEETS
2			4			15

ASSEMBLED BY :	GAR	DATE :	5/25
CHECKED BY :	WDH	DATE :	5/25
DESIGN ENGINEER OF RECORD:	WDH	DATE :	5/25
DRAWN BY :	DGE 03/10	REV. 04/15	MAA/TMG
CHECKED BY :	MKT 03/10		

5/11/2025
c:\users\hbolinsky\documents\pw-amt-02\dms39708\401.021_BP2R034_SMU_EB_S1-10.dgn
hbolinsky

STD. NO. EB_30_105S

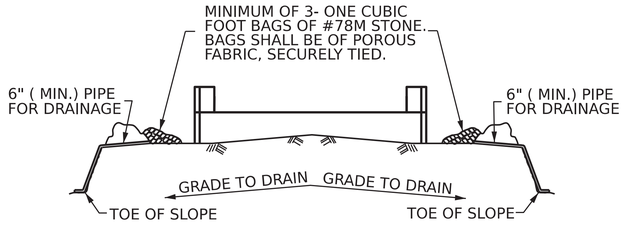

BAGGED STONE AND PIPE SHALL BE PLACED IMMEDIATELY AFTER COMPLETION OF END BENT EXCAVATION. PIPE MAY BE EITHER CONCRETE, CORRUGATED STEEL, CORRUGATED ALUMINUM ALLOY, OR CORRUGATED PLASTIC. PERFORATED PIPE WILL NOT BE ALLOWED.

BAGGED STONE SHALL REMAIN IN PLACE UNTIL THE ENGINEER DIRECTS THAT IT BE REMOVED. THE CONTRACTOR SHALL REMOVE AND DISPOSE OF SILT ACCUMULATIONS AT BAGGED STONE WHEN SO DIRECTED BY THE ENGINEER. BAGS SHALL BE REMOVED AND REPLACED WHENEVER THE ENGINEER DETERMINES THAT THEY HAVE DETERIORATED AND LOST THEIR EFFECTIVENESS.

NO SEPARATE PAYMENT WILL BE MADE FOR THIS WORK AND THE ENTIRE COST OF THIS WORK SHALL BE INCLUDED IN THE UNIT CONTRACT PRICE BID FOR THE SEVERAL PAY ITEMS.

TEMPORARY DRAINAGE AT END BENT

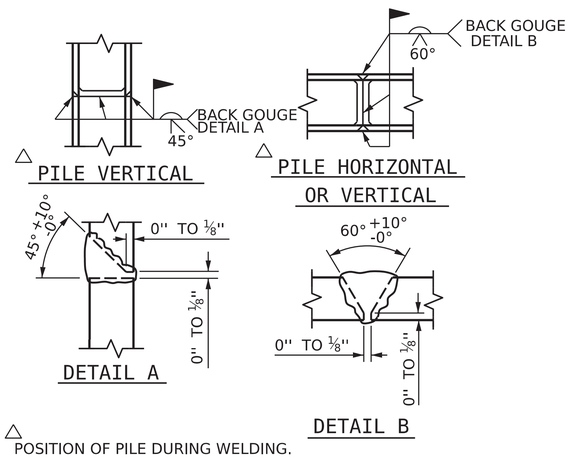

△ POSITION OF PILE DURING WELDING.

PILE SPLICE DETAILS

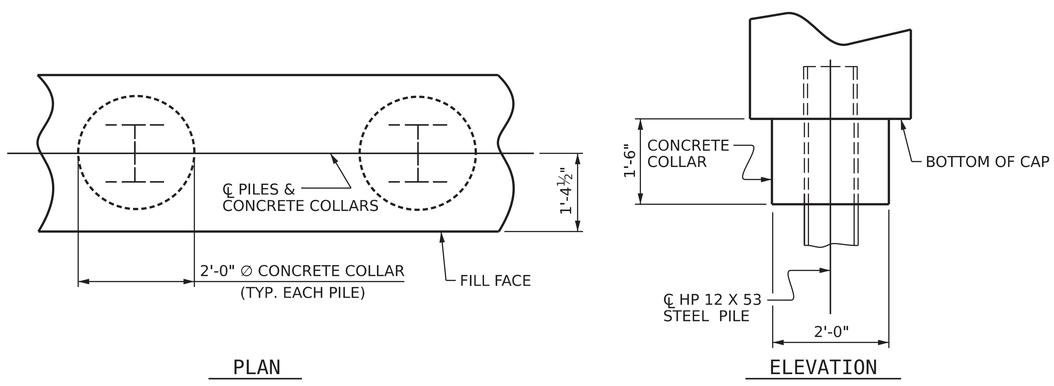

CORROSION PROTECTION FOR STEEL PILES DETAIL

(END BENT No. 1 SHOWN, END BENT No. 2 SIMILAR BY ROTATION)

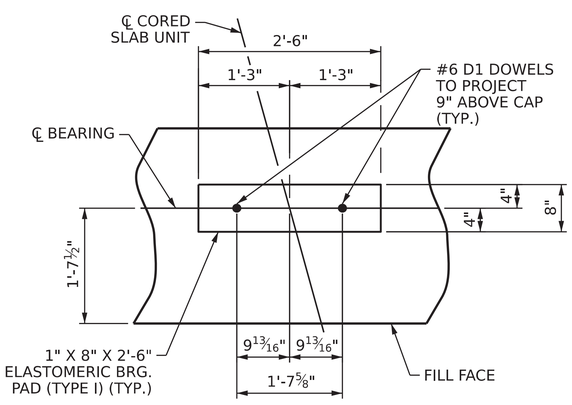

DETAIL "A"

(END BENT No. 1 SHOWN, END BENT No. 2 SIMILAR BY ROTATION)

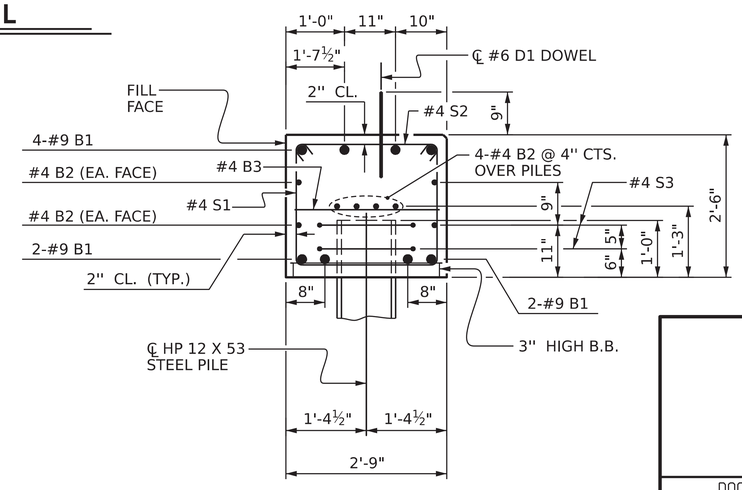

SECTION A-A

(CONCRETE COLLAR NOT SHOWN FOR CLARITY. SEE "CORROSION PROTECTION FOR STEEL PILES DETAIL.")

BAR TYPES

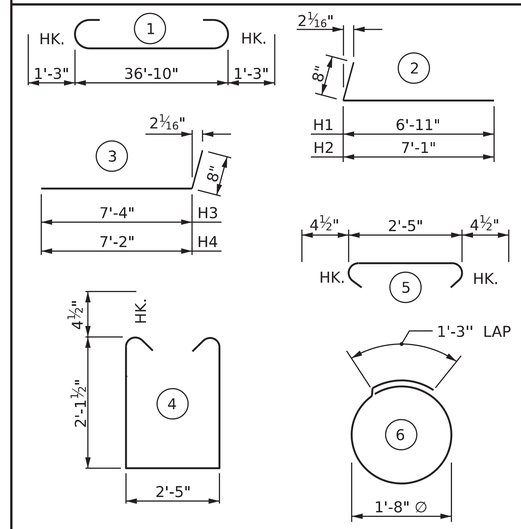

ALL BAR DIMENSIONS ARE OUT TO OUT.

END BENT No. 1	END BENT No. 2
HP 12 X 53 STEEL PILES NO: 5 LIN. FT.= 425	HP 12 X 53 STEEL PILES NO: 5 LIN. FT.= 425
PILE DRIVING EQUIPMENT SETUP FOR HP 12 X 53 STEEL PILES NO: 5	PILE DRIVING EQUIPMENT SETUP FOR HP 12 X 53 STEEL PILES NO: 5
PILE REDRIVES NO: 5	PILE REDRIVES NO: 5

BILL OF MATERIAL

FOR ONE END BENT

BAR	NO.	SIZE	TYPE	LENGTH	WEIGHT
B1	8	#9	1	39'-4"	1070
B2	16	#4	STR	19'-9"	211
B3	10	#4	STR	2'-5"	16
D1	20	#6	STR	1'-6"	45
H1	6	#4	2	7'-7"	30
H2	6	#4	2	7'-9"	31
H3	6	#4	3	8'-0"	32
H4	6	#4	3	7'-10"	31
K1	12	#4	STR	3'-1"	25
S1	48	#4	4	7'-5"	238
S2	48	#4	5	3'-2"	102
S3	10	#4	6	6'-6"	43
V1	49	#4	STR	4'-8"	153

REINFORCING STEEL (FOR ONE END BENT) 2027 LBS.

CLASS A CONCRETE BREAKDOWN (FOR ONE END BENT)

POUR #1 CAP, LOWER PART OF WINGS & COLLARS 11.6 C.Y.

POUR #2 UPPER PART OF WINGS 1.8 C.Y.

TOTAL CLASS A CONCRETE 13.4 C.Y.

PROJECT NO. BP2.R034.1

PITT COUNTY

STATION: 15+08.00 -L-

SHEET 4 OF 4

ASSEMBLED BY : GAR		DATE :	5/25
CHECKED BY : WDH		DATE :	5/25
DESIGN ENGINEER OF RECORD: WDH		DATE :	5/25
DRAWN BY : DGE	12/09	REV. 4/17	MAA/THC
CHECKED BY : MKT	01/10		

5/11/2025
c:\users\hbolinsky\documents\pw-amt-02\dms39708\401_023_BP2R034_SMU_EB_S1-11.dgn
hbolinsky

NORTH CAROLINA PROFESSIONAL SEAL 036583 ENGINEER WESLEY D. HEVENER
5/22/2025

DOCUMENT NOT CONSIDERED FINAL UNLESS ALL SIGNATURES COMPLETED

AMT A. MORTON THOMAS AND ASSOCIATES, INC.
900 RIDGEFIELD DRIVE, SUITE 325 • RALEIGH, NC 27609
(919) 855-9989 • NC LICENSE NO. F-1049
WWW.AMTENGINEERING.COM

STATE OF NORTH CAROLINA
DEPARTMENT OF TRANSPORTATION
RALEIGH

SUBSTRUCTURE

END BENT NO. 1 & 2 DETAILS

REVISIONS						SHEET NO.
NO.	BY:	DATE:	NO.	BY:	DATE:	S1-12
1			3			TOTAL SHEETS
2			4			15

STD. NO. EB_30_105S

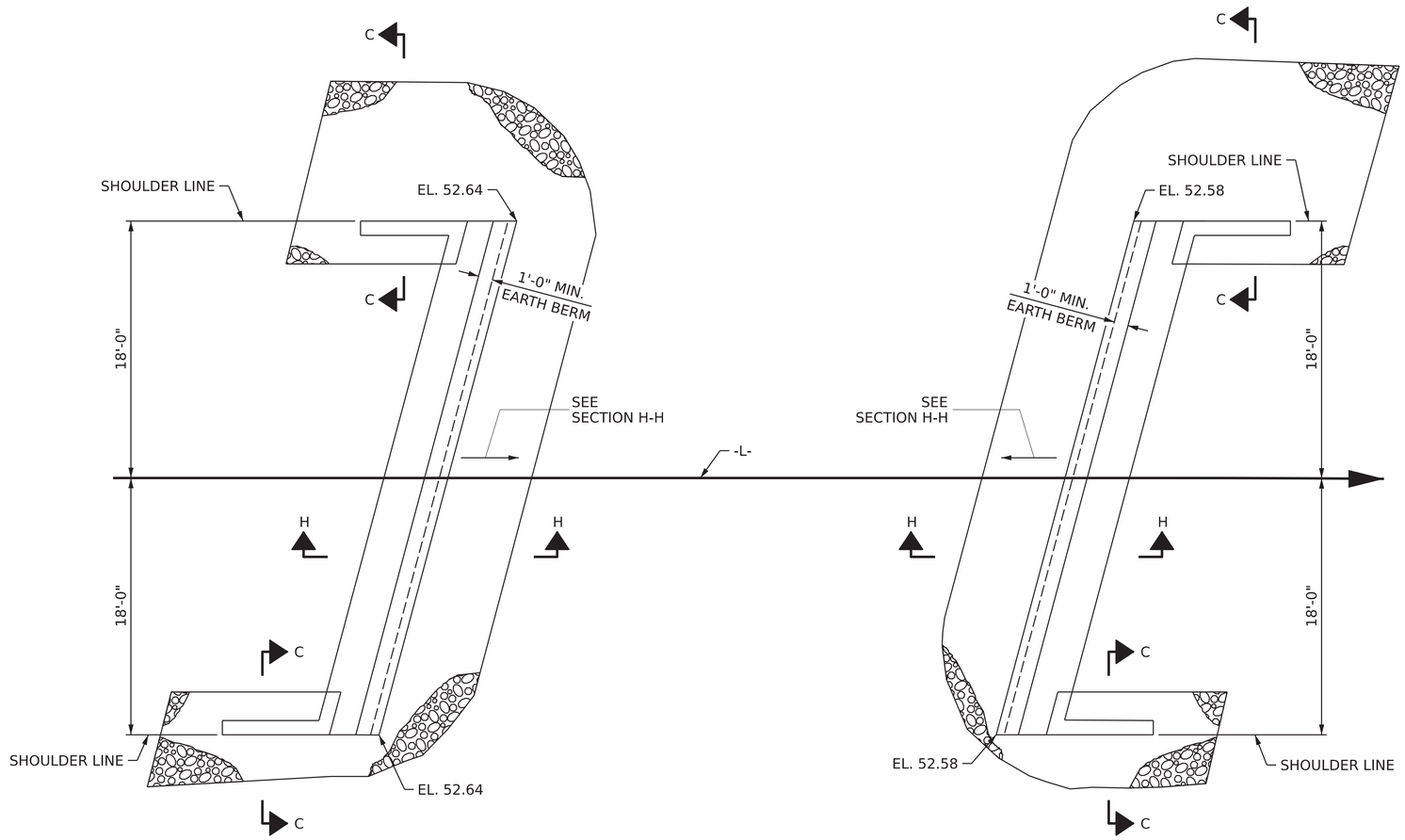

PLAN

NOTES

FOR BERM WIDTH DIMENSIONS, SEE GENERAL DRAWING

ESTIMATED QUANTITIES		
BRIDGE @ STA. 15+08.00 -L-	RIP RAP CLASS II (2'-0" THICK) (GRANITE)	GEOTEXTILE FOR DRAINAGE
	TONS	SQUARE YARDS
END BENT 1	15	74
END BENT 2	15	80

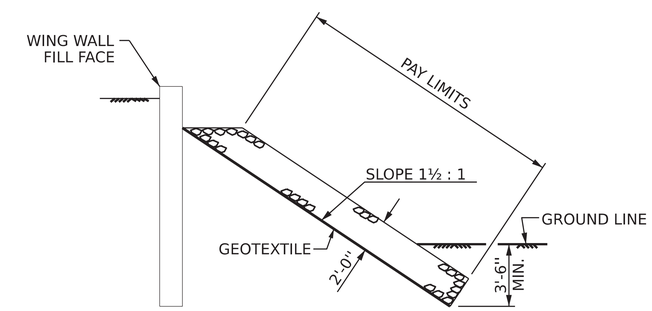

SECTION C-C

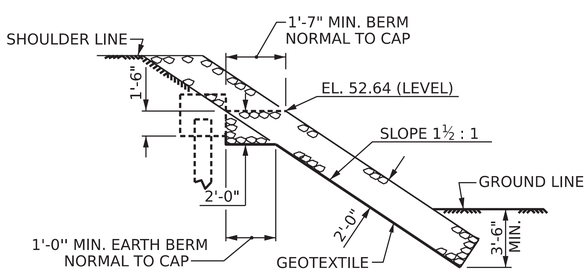

SECTION H-H
END BENT 1

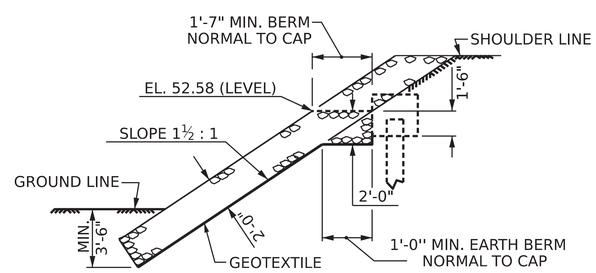

SECTION H-H
END BENT 2

PROJECT NO. BP2.R034.1

PITT COUNTY

STATION: 15+08.00 -L-

NORTH CAROLINA PROFESSIONAL SEAL 036583 ENGINEER WESLEY D. HEVENER

5/22/2025

DOCUMENT NOT CONSIDERED FINAL UNLESS ALL SIGNATURES COMPLETED

AMT A. MORTON THOMAS AND ASSOCIATES, INC.
900 RIDGEFIELD DRIVE, SUITE 325 • RALEIGH, NC 27609
(919) 855-9989 • NC LICENSE NO. F-1049
WWW.AMTENGINEERING.COM

STATE OF NORTH CAROLINA
DEPARTMENT OF TRANSPORTATION
RALEIGH

RIP RAP DETAILS

REVISIONS						SHEET NO.
NO.	BY:	DATE:	NO.	BY:	DATE:	S1-13
1			3			TOTAL SHEETS
2			4			15

DRAWN BY : GAR DATE : 5/25
CHECKED BY : WDH DATE : 5/25
DESIGN ENGINEER OF RECORD: WDH DATE : 5/25

5/11/2025
c:\users\hbolinsky\documents\pw-amt-02\dms39708\401.025_BP2R034_SMU_RR_S1-13.dgn
hbolinsky

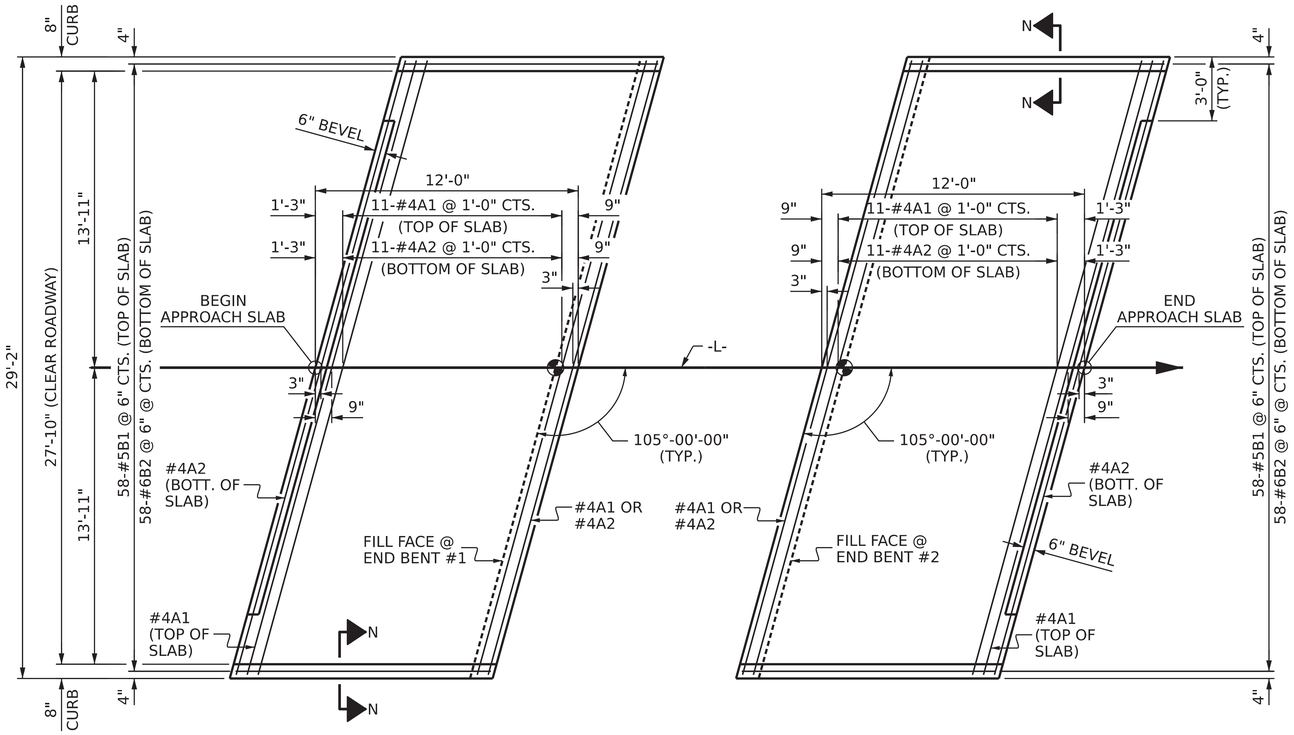

PLAN @ END BENT #1

PLAN @ END BENT #2

DIMENSIONS SHOWN ARE TYPICAL FOR BOTH APPROACH SLABS

NOTES

FOR BRIDGE APPROACH FILL INCLUDING GEOTEXTILE, 4" ∅ DRAINAGE PIPE, AND SELECT MATERIAL BACKFILL, SEE ROADWAY PLANS.

GEOTEXTILE SHALL BE TYPE 1 IN ACCORDANCE WITH THE STANDARD SPECIFICATIONS SECTION 1056.

SELECT MATERIAL BACKFILL (CLASS V OR CLASS VI) SHALL BE IN ACCORDANCE WITH STANDARD SPECIFICATIONS SECTION 1016.

SELECT MATERIAL BACKFILL IS TO BE CONTINUOUS ALONG FILL FACE OF BACKWALL FROM OUTSIDE EDGE TO OUTSIDE EDGE OF APPROACH SLAB.

FOR THE 4" ∅ DRAINAGE PIPE OUTLET(S), SEE ROADWAY STANDARD DRAWINGS.

AREA BETWEEN THE WINGWALL AND APPROACH SLAB SHALL BE GRADED TO DRAIN THE WATER AWAY FROM THE FILL FACE OF THE BRIDGE AND SHALL BE PAVED. SEE ROADWAY PLANS.

APPROACH SLAB GROOVING IS NOT REQUIRED.

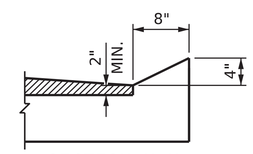

SECTION N-N

BILL OF MATERIAL

APPROACH SLAB AT EB #1

BAR	NO.	SIZE	TYPE	LENGTH	WEIGHT
* A1	13	#4	STR	29'-10"	259
A2	13	#4	STR	29'-10"	259
* B1	58	#5	STR	11'-1"	670
B2	58	#6	STR	11'-7"	1009
REINFORCING STEEL				LBS.	1268
* EPOXY COATED REINFORCING STEEL				LBS.	929
CLASS AA CONCRETE				C. Y.	16.7

APPROACH SLAB AT EB #2

BAR	NO.	SIZE	TYPE	LENGTH	WEIGHT
* A1	13	#4	STR	29'-10"	259
A2	13	#4	STR	29'-10"	259
* B1	58	#5	STR	11'-1"	670
B2	58	#6	STR	11'-7"	1009
REINFORCING STEEL				LBS.	1268
* EPOXY COATED REINFORCING STEEL				LBS.	929
CLASS AA CONCRETE				C. Y.	16.7

CURB DETAILS

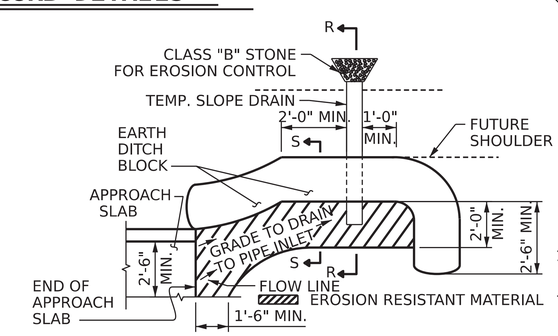

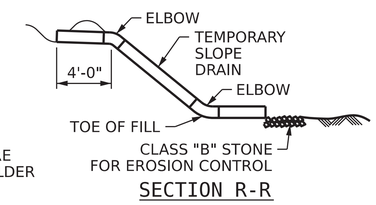

SECTION R-R

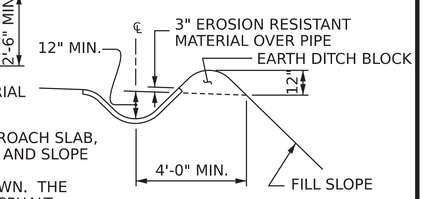

SECTION S-S

NOTE: IMMEDIATELY AFTER THE CONSTRUCTION OF THE APPROACH SLAB, THE CONTRACTOR SHALL PROVIDE TEMPORARY BERM AND SLOPE DRAIN. CONTRACTOR SHALL GRADE TO PIPE INLET AND PROVIDE EROSION RESISTANT MATERIAL AS SHOWN. THE EROSION RESISTANT MATERIAL SHALL BE EITHER 1) ASPHALT PLANT MIX, TYPE 1 OR TYPE 2, MIN. 2" DEPTH, 2) EROSION CONTROL MAT, OR 3) CONCRETE, AS DIRECTED BY THE ENGINEER. THE SLOPE DRAIN SHALL CONSIST OF A NON-PERFORATED TEMPORARY DRAINAGE PIPE, 12 INCHES IN DIAMETER.

PLAN VIEW

TEMPORARY BERM AND SLOPE DRAIN DETAILS

(TO BE USED WHEN SHOULDER BERM GUTTER IS REQUIRED)

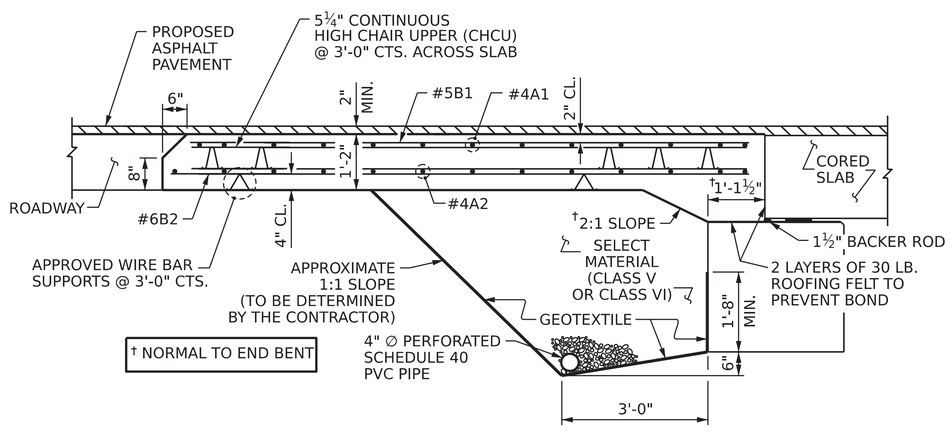

SECTION THRU SLAB

(TYPE II - MODIFIED APPROACH FILL)

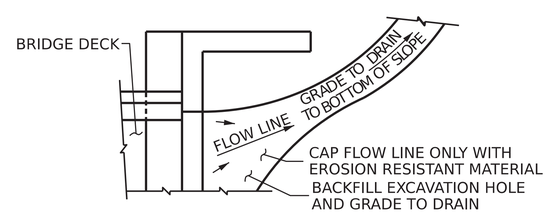

NOTE: IF THE APPROACH SLAB IS NOT CONSTRUCTED IMMEDIATELY AFTER THE BACKFILLING OF THE END BENT EXCAVATION, GRADE TO DRAIN TO THE BOTTOM OF THE SLOPE AND PROVIDE EROSION RESISTANT MATERIAL SUCH AS FIBERGLASS ROVING OR AS DIRECTED BY THE ENGINEER TO PREVENT SOIL EROSION AND TO PROTECT THE AREA ADJACENT TO THE STRUCTURE. THE CONTRACTOR WILL BE REQUIRED TO REMOVE THESE MATERIALS PRIOR TO CONSTRUCTION OF THE APPROACH SLAB.

TEMPORARY DRAINAGE DETAIL

SPLICE LENGTHS

BAR SIZE	EPOXY COATED	UNCOATED
#4	1'-11"	1'-7"
#5	2'-5"	2'-0"
#6	3'-7"	2'-5"

PROJECT NO. BP2.R034.1

PITT COUNTY

STATION: 15+08.00 -L-

NORTH CAROLINA PROFESSIONAL SEAL 036583 ENGINEER MESLEY D. HEVENER

5/22/2025

DOCUMENT NOT CONSIDERED FINAL UNLESS ALL SIGNATURES COMPLETED

AMT A. MORTON THOMAS AND ASSOCIATES, INC.
900 RIDGEFIELD DRIVE, SUITE 325 • RALEIGH, NC 27609
(919) 855-9989 • NC LICENSE NO. F-1049
WWW.AMTENGINEERING.COM

STATE OF NORTH CAROLINA
DEPARTMENT OF TRANSPORTATION
RALEIGH

STANDARD

BRIDGE APPROACH SLAB

FOR PRESTRESSED CONCRETE CORED SLAB UNIT (SUB-REGIONAL TIER) 105° SKEW

REVISIONS						SHEET NO.
NO.	BY:	DATE:	NO.	BY:	DATE:	S1-14
1			3			TOTAL SHEETS
2			4			15

STD. NO. BAS_30_105S

ASSEMBLED BY : GAR		DATE :	5/25
CHECKED BY : WDH		DATE :	5/25
DESIGN ENGINEER OF RECORD: WDH		DATE :	5/25
DRAWN BY : SHS/MMA 5/09	REV. 12/17	MAA/THC	
CHECKED BY : BCH 5/09	REV. 08/19	BNB/THC	

5/11/2025
c:\users\hbolinsky\documents\pw-amt-02\dms39708\401_027_BP2R034_SMU_AS_S1-14.dgn
hbolinsky

STANDARD NOTES

DESIGN DATA:

SPECIFICATIONS	AASHTO (CURRENT)
LIVE LOAD	SEE PLANS
IMPACT ALLOWANCE	SEE AASHTO
STRESS IN EXTREME FIBER OF STRUCTURAL STEEL - AASHTO M270 GRADE 36	20,000 LBS. PER SQ. IN.
- AASHTO M270 GRADE 50W	27,000 LBS. PER SQ. IN.
- AASHTO M270 GRADE 50	27,000 LBS. PER SQ. IN.
REINFORCING STEEL IN TENSION - GRADE 60	24,000 LBS. PER SQ. IN.
CONCRETE IN COMPRESSION	1,200 LBS. PER SQ. IN.
CONCRETE IN SHEAR	SEE AASHTO
STRUCTURAL TIMBER - TREATED OR UNTREATED EXTREME FIBER STRESS	1,800 LBS. PER SQ. IN.
COMPRESSION PERPENDICULAR TO GRAIN OF TIMBER	375 LBS. PER SQ. IN.
EQUIVALENT FLUID PRESSURE OF EARTH	30 LBS. PER CU. FT. (MINIMUM)

MATERIAL AND WORKMANSHIP:

EXCEPT AS MAY OTHERWISE BE SPECIFIED ON PLANS OR IN THE SPECIAL PROVISIONS, ALL MATERIAL AND WORKMANSHIP SHALL BE IN ACCORDANCE WITH THE 2024 "STANDARD SPECIFICATIONS FOR ROADS AND STRUCTURES" OF THE N. C. DEPARTMENT OF TRANSPORTATION.

STEEL SHEET PILING FOR PERMANENT OR TEMPORARY APPLICATIONS SHALL BE HOT ROLLED.

CONCRETE:

UNLESS OTHERWISE REQUIRED ON PLANS, CLASS A CONCRETE SHALL BE USED FOR ALL PORTIONS OF ALL STRUCTURES WITH THE EXCEPTION THAT: CLASS AA CONCRETE SHALL BE USED IN BRIDGE SUPERSTRUCTURES, ABUTMENT BACKWALLS, AND APPROACH SLABS; AND CLASS B CONCRETE SHALL BE USED FOR SLOPE PROTECTION AND RIP RAP.

CONCRETE CHAMFERS:

UNLESS OTHERWISE NOTED ON THE PLANS, ALL EXPOSED CORNERS ON STRUCTURES SHALL BE CHAMFERED ¾" WITH THE FOLLOWING EXCEPTIONS: TOP CORNERS OF CURBS MAY BE ROUNDED TO 1½" RADIUS WHICH IS BUILT INTO CURB FORMS; CORNERS OF TRANSVERSE FLOOR EXPANSION JOINTS SHALL BE ROUNDED WITH A ¼" FINISHING TOOL UNLESS OTHERWISE REQUIRED ON PLANS; AND CORNERS OF EXPANSION JOINTS IN THE ROADWAY FACES AND TOPS OF CURBS AND SIDEWALKS SHALL BE ROUNDED TO A ¼" RADIUS WITH A FINISHING STONE OR TOOL UNLESS OTHERWISE REQUIRED ON PLANS.

DOWELS:

DOWELS WHEN INDICATED ON PLANS AS FOR CULVERT EXTENSIONS, SHALL BE EMBEDDED AT LEAST 12" INTO THE OLD CONCRETE AND GROUTED INTO PLACE WITH 1:2 CEMENT MORTAR.

ALLOWANCE FOR DEAD LOAD DEFLECTION, SETTLEMENT, ETC. IN CASTING SUPERSTRUCTURES:

BRIDGES SHALL BE BUILT ON THE GRADE OR VERTICAL CURVE SHOWN ON PLANS. SLABS, CURBS AND PARAPETS SHALL CONFORM TO THE GRADE OR CURVE.

ALL DIMENSIONS WHICH ARE GIVEN IN SECTION AND ARE AFFECTED BY DEAD LOAD DEFLECTIONS ARE DIMENSIONS AT CENTER LINE OF BEARING UNLESS OTHERWISE NOTED ON PLANS. IN SETTING FORMS FOR STEEL BEAM BRIDGES AND PRESTRESSED CONCRETE GIRDER BRIDGES, ADJUSTMENTS SHALL BE MADE DUE TO THE DEAD LOAD DEFLECTIONS FOR THE ELEVATIONS SHOWN. WHERE BLOCKS ARE SHOWN OVER BEAMS FOR BUILDING UP TO THE SLAB, THE VERTICAL DIMENSIONS OF THE BLOCKS SHALL BE ADJUSTED BETWEEN BEARINGS TO COMPENSATE FOR DEAD LOAD DEFLECTIONS, VERTICAL CURVE ORDINATE, AND ACTUAL BEAM CAMBER. WHERE BOTTOM OF SLAB IS IN LINE WITH BOTTOM OF TOP FLANGES, DEPTH OF SLAB BETWEEN BEARINGS SHALL BE ADJUSTED TO COMPENSATE FOR DEAD LOAD DEFLECTION, VERTICAL CURVE ORDINATE, AND ACTUAL BEAM CAMBER.

IN SETTING FALSEWORK AND FORMS FOR REINFORCED CONCRETE SPANS, AN ALLOWANCE SHALL BE MADE FOR DEAD LOAD DEFLECTIONS, SETTLEMENT OF FALSEWORK, AND PERMANENT CAMBER WHICH SHALL BE PROVIDED FOR IN ADDITION TO THE ELEVATIONS SHOWN. AFTER REMOVAL OF THE FALSEWORK, THE FINISHED STRUCTURES SHALL CONFORM TO THE PROFILE AND ELEVATIONS SHOWN ON THE PLANS AND CONSTRUCTION ELEVATIONS FURNISHED BY THE ENGINEER.

DETAILED DRAWINGS FOR FALSEWORK OR FORMS FOR BRIDGE SUPERSTRUCTURE AND ANY STRUCTURE OR PARTS OF A STRUCTURE AS NOTED ON THE PLANS SHALL BE SUBMITTED TO THE ENGINEER FOR APPROVAL BEFORE CONSTRUCTION OF THE FALSEWORK OR FORMS IS STARTED.

REINFORCING STEEL:

ALL REINFORCING STEEL SHALL BE DEFORMED. DIMENSIONS RELATIVE TO PLACEMENT OF REINFORCING ARE TO CENTERS OF BARS UNLESS OTHERWISE INDICATED IN THE PLANS. DIMENSIONS ON BAR DETAILS ARE TO CENTERS OF BARS OR ARE OUT TO OUT AS INDICATED ON PLANS.

WIRE BAR SUPPORTS SHALL BE PROVIDED FOR REINFORCING STEEL WHERE INDICATED ON THE PLANS. WHEN BAR SUPPORT PIECES ARE PLACED IN CONTINUOUS LINES, THEY SHALL BE SO PLACED THAT THE ENDS OF THE SUPPORTING WIRES SHALL BE LAPPED TO LOCK LEGS ON ADJOINING PIECES.

STRUCTURAL STEEL:

AT THE CONTRACTOR'S OPTION, HE MAY SUBSTITUTE ⅞" Ø SHEAR STUDS FOR THE ¾" Ø STUDS SPECIFIED ON THE PLANS. THIS SUBSTITUTION SHALL BE MADE AT THE RATE OF 3 - ⅞" Ø STUDS FOR 4 - ¾" Ø STUDS, AND STUD SPACING CHANGES SHALL BE MADE AS NECESSARY TO PROVIDE THE SAME EQUIVALENT NUMBER OF ⅞" Ø STUDS ALONG THE BEAM AS SHOWN FOR ¾" Ø STUDS BASED ON THE RATIO OF 3 - ⅞"Ø STUDS FOR 4 - ¾" Ø STUDS. STUDS OF THE LENGTH SPECIFIED ON THE PLANS MUST BE PROVIDED. THE MAXIMUM SPACING SHALL BE 2'-0".

EXCEPT AT THE INTERIOR SUPPORTS OF CONTINUOUS BEAMS WHERE THE COVER PLATE IS IN CONTACT WITH BEARING PLATE, THE CONTRACTOR MAY, AT HIS OPTION, SUBSTITUTE FOR THE COVER PLATES DESIGNATED ON THE PLANS COVER PLATES OF THE EQUIVALENT AREA PROVIDED THESE PLATES ARE AT LEAST 5/16" IN THICKNESS AND DO NOT EXCEED A WIDTH EQUAL TO THE FLANGE WIDTH LESS 2" OR A THICKNESS EQUAL TO 2 TIMES THE FLANGE THICKNESS. THE SIZE OF FILLET WELDS SHALL CONFORM TO THE REQUIREMENTS OF THE CURRENT ANSI/AASHTO/AWS "BRIDGE WELDING CODE". ELECTROSLAG WELDING WILL NOT BE PERMITTED.

WITH THE SOLE EXCEPTION OF EDGES AT SURFACES WHICH BEAR ON OTHER SURFACES, ALL SHARP EDGES AND ENDS OF SHAPES AND PLATES SHALL BE SLIGHTLY ROUNDED BY SUITABLE MEANS TO A RADIUS OF APPROXIMATELY 1/16" OR EQUIVALENT FLAT SURFACE AT A SUITABLE ANGLE PRIOR TO PAINTING, GALVANIZING, OR METALLIZING.

HANDRAILS AND POSTS:

METAL STANDARDS AND FACES OF THE CONCRETE END POSTS FOR THE METAL RAIL SHALL BE SET NORMAL TO THE GRADE OF THE CURB, UNLESS OTHERWISE SHOWN ON PLANS. THE METAL RAIL AND TOPS OF CONCRETE POSTS USED WITH THE ALUMINUM RAIL SHALL BE BUILT PARALLEL TO THE GRADE OF THE CURB.

METAL HANDRAILS SHALL BE IN ACCORDANCE WITH THE PLANS. RAILS SHALL BE AS MANUFACTURED FOR BRIDGE RAILING. CASTINGS SHALL BE OF A UNIFORM APPEARANCE. FINS AND OTHER DEFORMATIONS RESULTING FROM CASTING OR OTHERWISE SHALL BE REMOVED IN A MANNER SO THAT A UNIFORM COLORING OF THE COMPLETED CASTING SHALL BE OBTAINED. CASTINGS WITH DISCOLORATIONS OR OF NON-UNIFORM COLORING WILL NOT BE ACCEPTED. CERTIFIED MILL REPORTS ARE REQUIRED FOR METAL RAILS AND POSTS.

SPECIAL NOTES:

GENERALLY, IN CASE OF DISCREPANCY, THIS STANDARD SHEET OF NOTES SHALL GOVERN OVER THE SPECIFICATIONS, BUT THE REMAINDER OF THE PLANS SHALL GOVERN OVER NOTES HEREON, AND SPECIAL PROVISIONS SHALL GOVERN OVER ALL. SEE SPECIFICATIONS ARTICLE 105-4.